DEVELOPMENT OF WOOD FIRING KILN
IN TERTIARY INSTITUTIONS IN NIGERIA

BY

AMOS A. AREO

A THESIS SUBMITTED TO THE POSTGRADUATE SCHOOL, AHMADU BELLO UNIVERSITY, ZARIA, IN PARTIAL FULFIlMENT OF THE REQUIREMENTS FOR THE AWARD OF THE DEGREE OF MASTER OF ARTS IN INDUSTRIAL DESIGN.

FACULTY OF ENVIRONMENTAL DESIGN

DEPARTMENT OF INDUSTRIAL DESIGN

AHMADU BELLO UNIVERSITY

ZAPIA

NOVEMBER 1993

DECLARATION

I solemnly declare that this thesis is my original work and that it has not been submitted anywhere for the award of any degree. All references are duly acknowledged.

AMOS A. AREO

CERTIFICATION

This thesis entitled *"DEVELOPMENT OF WOOD FIRING KILN IN TERTIARY INSTITUTIONS IN NIGERIA"* by **Amos A. Areo** meets the regulations governing the award of the degree of Master of Arts (Industrial Design) of Ahmadu Bello University, Zaria. It has this day been approved for its contributions to knowledge and literary presentation.

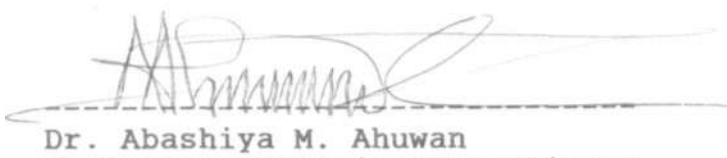

10/3/94

Dr. Abashiya M. Ahuwan
Chairman, Supervisory Committee

Date



10/3/94

Mr. A. A. Abede
Member, Supervisory Committee

Date



10/3/1994

Dr. B. A. Kparevzua
Head of Department

Date



20/6/97

Dean, Postgraduate School

Date

DEDICATION

This thesis is dedicated to my Late Father, Deacon Samuel Areo and my aged Mother, Deaconess Alice A. Areo.

ACKNOWLEDGEMENT

Many people at different places and in different capacities have contributed to making this research essay a reality. They are so numerous that I cannot thank all of them individually.

It is however, necessary for me to mention the names of some people who have played particularly important roles in the process of preparing the essay. I am grateful to my major Supervisor ***Dr. A. M. Ahuwan***, for various reasons. Apart from his directives he made available his personal readings on the subject which I would not have been able to obtain elsewhere.

My profound thanks go to the following people: ***Mr. A. A. Abede (my second Supervisor)*** for the invaluable assistance he rendered right from the data collection to the finish of the essay; ***Madam Deborah Olajumoke (my mother in-law), Mr. & Mrs. Michael Dare, Mr. and Mrs. Idowu Akanho, Mr. & Mrs. E. A. Areo, Mr. & Mrs. A. O. Olagunju, Mr. A. Ogunsiji, Mr. M. A. Akintomide, Mr & Mrs E. A. Ogun, Mr. & Mrs. Amale A. Areo and Lt. Comd. D. B. Alabi*** for their financial and moral support during the course of study.

Also my thanks go to ***Mr. Charles Counts*** for his contribution and invaluable information on Kiln Construction; ***Dr. A. O. Aboderin, Dr. D. O. Babalola, Dr. J. O. Popoola, Mr. N. O. E. Ijabor (my classmate)*** for their co-operation, useful and illuminating discussions they had with me and ***Miss S. O. Babalola*** who typed the manuscript.

Finally, my thanks go to my beautiful wife - ***Lydia A. Areo, Messrs. Adegoke, Oladayo and Miss Ojuolape (my children)*** for their love and support during the period of my study.

A. A. AREO

ABSTRACT

DEVELOPMENT OF WOOD-FIRING KILN IN TERTIARY INSTITUTIONS IN NIGERIA

BY

AMOS A. AREO

Under the Supervision of Dr. A. M. Ahuwan and Mr. A. A. Abede

The objective of this study is to provide practical approaches on how to construct wood firing kiln from raw materials available at Kankara, in Katsina State of Nigeria. The research has revealed lack of literature on the construction of kilns in the country, with the exception of few by foreign authors.

The type of the kiln referred to in this study is a downdraft which can be fired up to storeware temperature (1250^{oc} - 12650^{oc}). The bricks used were fired to cone 10 (1300^{oc}) in order to avoid further shrinkage.

In this study, wood is used as fuel and wood, being a solid matter, can only burn on its surface area, unlike gas, or liquid oil, which can spread and burn the whole area exposed to oxygen if ignited.

One of the aims of the research, is to present in clear and understandable form the important facts about kiln building. To make full use of the medium (kiln) the ceramist or potter needs skill, imagination and artistic vision and a sound knowledge of the technical side of the craft.

The problems of firing this type of kiln can be over come with practice as long as the basic principles of construction are maintained. It is anticipated that the present study will enable a creative worker to construct his own kiln.

Maintenance of basic standards are essential and without them there is no point in continuing in the construction of a small pottery kiln. Wood is still the most reliable fuel for firing a kiln, even at high temperature in Nigeria today.

TABLE OF CONTENTS

	PAGES
Title Page	i)
Declaration	ii)
Certification	iii)
Dedication	iv)
Acknowledgement	v)
Abstract	vii)
Table of Contents	ix)
List of Tables	xiii)
List of Figures	xiv)
List of Plates	xv)
List of Appendices	xvi)
Definition of Terms	xvii)

CHAPTER I:

INTRODUCTION AND BACKGROUND OF THE STUDY

1.1	Statement of the problem	4
1.2	Objective of the study	4
1.3	Basic Assumptions	4
1.4	Limitation	5
1.5	Delimitation	5

CHAPTER II:

LITERATURE REVIEW 6

2.1 The hearth and basket theories ... 7

2.2 Clay 9

2.3 Evolution of Kilns 11

2.3.1 Updraft Kiln 13

2.3.2 Downdraft Kiln 13

2.3.3 Crossdraft Kiln 14

2.4 Bricks 17

2.5 Methods of Kiln Construction 19

2.6 Wood as source of energy 22

2.7 Composition of wood 23

2.8 Sources and storage of wood 24

2.9 Combustion 25

2.10 Rate of Combustion 26

CHAPTER III:

RESEARCH PROCEDURE 28

3.1 Location of Materials 28

3.2 Line Blend 30

3.3 Drying and Firing Shrinkage 30

3.4 Test for Firing Shrinkage 32

3.5 Test for Water Absorption of Fired Clay ... 32

3.6 Production of Insulation and Dense Bricks 34

CHAPTER IV:

KILN DESIGN AND CONSTRUCTION 37

4.1 Points Considered 37

4.2 Materials 37

4.3 Kiln Foundation 38

4.4 Mortar 39

4.5 Floor 43

4.6 The Wall 43

4.7 Door 44

4.8 Arch 45

4.9 Damper 46

4.9.1 Chimney 47

4.9.2 Iron Work 47

CHAPTER V:

KILN OPERATION, FIRING TESTS AND RECOMMENDATIONS

5.1 Packing 48

5.2 Pre-Heating 48

5.2.1 Full Firing 50

(a) Bisquit (b) Glaze Firing ... 51

5.2.2 Cooling 52

5.3 First Firing 53

5.3.1 Result 54

5.4 Second Firing 55

5.4.1 Result 56

5.5 Third Firing 57
5.5.1 Result 57
5.6 Advantages of Wood Firing 59
5.7 Disadvantages of Wood Firing 59
5.8 Observations 60
5.9 Recommendations 61
5.10 Conclusion 61
BIBLIOGRAPHY 62
COST OF MATERIALS 66

LIST OF TABLES

	PAGES
Some Pottery Establishments in Nigeria ...	16
Line Blend	30
Shrinkage, Water Absorption and Apparent Porosity	33

LIST OF FIGURES

		PAGES
1.	Updraft Kiln	13
2.	Downdraft Kiln	13
3.	Crossdraft Kiln	14
4.	A Sample Test Bar	31
5.	Methods of Arranging Shelves And Props ...	7

LIST OF PLATES

		PAGES
1.	Mixture of Kaolin and Saw-dust	35
2.	Brick making using slop method	36
3.	Lifting bricks on the ground by its side ...	36
4.	Concrete foundation	39
5.	Mortar - (Mixture of Kaolin and Saw-dust plus sodium silicate)	40
6.	Application of mortar with trowel	41
7.	Grate	42
8.	Fire Box Position	42
9.	Lying bricks length-wise following flue direction	43
10.	The door and chimney position	44
11.	An arch mould in position	45
12.	Damper position	46
13.	A Back-view of a Chimney	47
14.	Pre-heating	49
15.	Bisquit Firing Results	50
16.	Poking and raking with a long hook from fire box	52
17.	First glaze firing result	54
18.	Second glaze firing result	56
19.	Third glaze firing result	58
20.	Finished glaze wares	58

LIST OF APPENDICES

		PAGES
I.	Cost of Materials	66
II.	Standard Bricks Sizes	67
III.	Some of the tools used during the kiln construction	68
IV.	Methods of arranging shelves and props ...	70
V.	Plan of wood firing downdraft kiln	72

DEFINITION OF TERMS

BAG WALL: A firebrick structure which prevents the intense heat of the furnace from striking directly on the wares.

BTU: British Thermal Unit

CONES: Instrument for gauging heat in Kilns which are made out of the constituents of glazes in form of tall pyramids which bend and melt at given temperatures.

CRYSTALLIZED: Molecules which are built up into a three dimensional repeat pattern.

DAMPER: Adjustable shelters in the Kiln flues or chimneys used partially to restrict the exhaust opening from the kilns. This controls the heat escaping and the fresh air entering the kiln.

DEVITRIFY: The change from a glassy to crystalline state. Glaze may partially devitrify during a slow cooling, giving a frosty look.

DOWN DRAFT KILN: A more complex system than the up-draft kiln whereby the exhaust as well as the intake are at the bottom. This causes the heat to affect the ware on both its up-ward and down-ward paths. It requires a chimney to induce enough draft.

FIRE CLAY:	A clay with a high maturing point.
FIRE BRICK:	A brick that can withstand high temperature when a kiln is fired.
GLAZE:	A glassy covering applied to a ceramic material.
GRATE:	A frame with iron bars for holding wood in a fire place.
GROG:	Fired clay ground to various mesh sizes.
HEADER COURSES:	Bricks laid across the wall.
HYDROCARBON:	A compound of hydrogen and carbon.
KILN:	A Furnace made of refractory clay materials for firing ceramic products.
KINDLING:	The temperature at which a material begins to burn.
MATURING TEMPERATURE:	The temperature at which a glaze melts or a clay body reaches the point of optimum vitrification with no deformation of the form.
MORTAR:	A mixture of saw-dust, fire grog, with clay for kiln building.
PYROMETER:	A device for measuring high temperatures, as distinct from low temperature mercury thermometers.
SLAGGING:	Small pieces broken off during firing.
SLAKE:	The addition of excessive water upon a clay mass which makes it to lose its form and produces a muddy solution.

SOAKING:	An expression describing a steady firing during which heat penetrates through the wares but does not rise as a whole.
SOLDIER COURSES:	Bricks laid at right - angles to the wall.
SPALLING:	Splitting or flaking occurs when subjected to sudden temperature changes or mechanical stresses.
STRETCHER COURSES:	Bricks running along the wall.
STRINGER COURSES:	Bricks laid parallel to the wall.
VITRIFICATION:	The process of heating a material until it melts into glass like substance.
WARE:	Pottery or porcelain in raw bisque or glaze.

CHAPTER ONE

INTRODUCTION AND BACKGROUND OF THE STUDY

Pottery first appeared about 15,000 - 10,000 B.C. at the beginning of the Neolithic (new ston)e age. The Nomads knew about pottery, but did not use it because of its fragility. Pottery became a characteristic - almost a symbol of settled life, its appearance and development marked an important stage in the progress of man.

Nevertheless, clay has been regarded as the first plastic material to be discovered by man. The end product is obtained by firing clay shapes at a high temperature which changes the physical and chemical properties of the original clay into a new substance of hardness and durability.

Again, there is a great variety of firing methods such as wood, coal, oil, gas and electricity. While the folk potters applied pit or bonfiring techniques, the studio/ceramics artist needs kilns. But in a developing country such as Nigeria the provision of such facilities depends on availability of adequate funds for importation. Igwilo (1982) points out that in the United States of America and other developed countries, wood is seldomly used due to the availability of gas and reliable electricity.

In Nigeria today, ceramic art has not taken a wider stride in the main-stream. This is so because availability of electricity and supply of domestic gas cannot be guaranteed, the only alternative answer would be to resort to wood firing kilns. With wood firing, one does not need to rely on man-made energy and besides wood as fuel is relatively cheaper and available.

Therefore, any potter who intends to make a living from his craft needs a kiln for the firing of his works. Clayware, no matter the level of skill and knowledge that have gone into its making, has no

functional value until it has been fired. The wood kiln is therefore one of the potter's most important and essential equipment.

In our Post Primary/Tertiary Institutions in Nigeria and Oyo State in particular, efforts are being made to encourage the production of tools materials for art works and to stimulate the growth of basic science culture in the society.

As part of its own quota, the Industrial Development Centre (I.D.C) Samaru - Zaria has started the production of potter's kick-wheel and kiln using local raw materials. Despite the enthusiasm of the I.D.C. the professionals in their field lack the experience for fabricating, maintaining the basic tools and equipment which they use routinely. The realization of this fact has led to the development of an efficient wood kiln as fuel in ceramic firing.

Various methods of producing durable clay articles include sun drying, firing using wood, coal, oil and other solid materials as fuel. Children have discovered by themselves how to make mud pies, and cakes, so it was the early man, who learnt how to make mud pots.

In Nigeria today, especially in the rural areas wood is being used as fuel for cooking. However, in (1987) the Federal Government has discouraged the use of wood due to its, policy on re-afforestation and to prevent desert encroachment. the then Head of State in (1984) said and I quote, ***"The days of unlimited importation of raw materials are over and industries must now find local materials".*** The serious lapses in our industrial policy over the years led to mass importation of raw materials. Later General Ibrahim Babangida also advocated the evolution of a kind of society that has the capacity of sustaining itself materially and industrially. This slogan is being re-echoed by various organizations in the country where emphasis is placed on goods made in Nigeria. The "do-it-

yourself" experience will help students, teachers and studio potters to build confidence in themselves which the present study intends to solve. The availability of gas and electricity is confined to metropolitan areas, a factor which militates against the spread of pottery (ceramics) industry to rural areas where it really belongs. Besides the difficult in the supply of gas, the cost of gas fluctuates frequently. Therefore, scarcity of gas has made the wood firing kiln system more attractive and economical.

In institutions of higher learning, the method of open firing is usually porous and results into easy breakage due to lack of technical ingenuity and skill. Therefore, there is the need for a replacement of the open firing kiln. This will enhance the study of pottery in tertiary institutions in Nigeria and the Oyo state College of Education in particular.

For ceramists to be self-sufficient, they should only limit themselves to ceramic crafts. This would enable them to design, construct efficient wood kiln, produce major tools and equipment. The success particularly in rural setting and in developing countries will depend on the ability to carry out the construction and maintenance.

The study of ceramics has clarified some issues on kiln design and construction. Until of recent, not much was done in the area of kiln construction in this country. Most of the small scale enterprenuers rely on pre-fabricated imported kilns from abroad which are difficult to import as a result of high costs. The knowledge of kiln construction in most Nigeria institutions has resulted into firing of their clay works.

The Department of Industrial Design, Ahmadu Bello University, Zaria has recently focussed attention on the design and construction of pottery equipment. For example, gas kilns, kerosine kilns with their burners, potter's wheel were designed, constructed and are in

use. The need for further work in this area has lately been emphasized by Ewule (1988) for a ***"possibility of total development in ceramics"***. Therefore, the need for fabricating of tools and equipment for production in all sectors of our economy cannot be over-emphasized.

1.1 STATEMENT OF THE PROBLEM

The problem of the study is how to design and construct an efficient wood firing kiln in Tertiary Institutions in Nigeria from available materials. The operation of the kiln is aimed at stoneware temperature (above 1280^{0C}).

1.2 OBJECTIVE OF THE STUDY

The objectives of the study are as follows:

1. To reduce dependence on importation of kilns from foreign countries.

2. To intensify the use of local materials in building wood kiln that will be durable and reliable to withstand a high temperature (i.e. $1250^{0}C$ - $1300^{0}C$).

3. To provide information for potters (especially students and small scale pottery industries) to build their own kilns).

1.3 ASSUMPTION

1. This study assumes that ceramics materials, especially clay will be analysed and tested to determine the percentage of shrinkage.

2. Local materials will be available for the construction of wood kiln.

3. There will be a device of increasing the temperature range of firing and output with maximum efficiency.

1.4 LIMITATION

This research undertakes the study of the development of wood firing kiln in Tertiary Institutions in Nigeria, from locally available materials. The study therefore covers the descriptions of local materials (nature and type), ways and means of collecting the materials and the processes involved in the building of wood kiln e.g. stages of construction and specific temperature range (1250 - 1280)^{0}C to reach stoneware.

1.5 DELIMITATION

The delimitation of this research is applicable to Nigeria as a whole, but the study is restricted to Oyo and Osun States.

CHAPTER TWO

LITERATURE REVIEW

INTRODUCTION:

Before the advent of the wheel the pre-historic potters moulded their utensils by hand. The remains of their products, regarded as **"work of art"** had been excavated by the archaeologists and preserved in some of the world famous museums. The invention of the wheel revolutionised the potters' art and craft, but the hand building system continued to function in a number of important countries even up to this present time. Nigeria is not an exception.

The discovery of the pottery making and kiln building became very important as such, pottery making and kiln building go hand in hand: **Gregory (1977).** Pottery is not only an ancient craft, but the story of mankind was written in indelible fired clay. With the invention of the potter's wheel to form objects and the kiln for firing which were subsequent technical improvements, and with the exception of the refinement and research in glaze development, the methods of pottery making not changed over the years. Hofsted (1976) said that scratches upon a piece of pottery may be less legible than signs made from paints and inks upon a paper, but clay marks are more lasting. So the reason for this craft in the course of time, has become an instrument of artistic expression. For instance, Yoruba pots depict traditional styles with decorations of birds, chameleon, lizards, snakes and geometrical shapes.

Pottery is a mirror of civilization which helps man to find out more about himself. The famous Dead Sea Scrolls which are of considerable historical importance would probably not have survived, had it not been for the pots where the materials were preserved. Generally, pottery in Nigeria is of two types: traditional and contemporary. In most areas, however, traditional pottery is by far more significantly stylish. The abundance of

pottery materials has offered a wider range of production techniques which provides evidence of intelligence, potentialities of the potters.

Apparently, the modern ceramist might hold the view that these traditional techniques would be extinct due to rapid economic development of the country. But thanks goodness, pottery in Nigeria is still an authentic folk art and the potters are still producing abundantly as before and the quality remains high. The origin of pottery and firing characterized by the hearth and basket theories were as a result of curiosity.

2.1 HEARTH THEORY:

Rhodes (1968) hearth theory held the view that **"men observed that the clay soils beneath the camp fire became hardened by the heat".**

Ahuwan (1987) felt that this theory is based on the fact that early man was exposed to the harsh weather conditions especially cold, as a result man was prone to warming himself up around a hearth. One can equally add that with the discovery of fire, the early man being a hunter could have observed a hardened earth whenever he roasted meat and while putting off the fire, with water, he observed that the ground was waterlogged.

Cooper (1972) felt that fire was a valuable and vital in early man's existence. Fire was carefully tended, because it was much easier to control and maintain than to create. Holes were made in the ground which were lined with clay. The fire kept in them would turn the clay into pottery and when the fire was eventually put out a crude vessel was left.

BASKET THEORY: The primitive collector needed containers for holding and storing fruit, meat and other food stuff found. Somehow he could weave reeds to serve as basket. He might have got this idea from bird nests.

The need for water containers and recalling that his foot prints held water, baskets were plastered with clay. Soon the early man found that he could heat water by dropping hot rocks into it. One day he might have placed a clay-lined basket too close to fire. The reed burnt and left a hardened clay shell. This discovery of effect of heat on clay is said to be the origin of pottery making.

Cooper (1972) pointed out that basket would have been lined with clay to render them water-proof and in due course as the clay dried out and contracted, a simple pot would be formed which could have either held fire or been put into the fire.

Alternatively, such clay lined baskets could have been burnt in the fire which left a simple fired pot behind. Such a theory pre-supposes the existence of basketry. In some early cultures basketry existed without pottery while others pottery existed without basketry. All that could be said was that a successful combination of social, technical and economic factors resulted in the discovery that clay changes to pot when fired.

Counts (1973) pointed out that ***"perhaps somebody tossed such a basket into the fire when it was too old to be used and then observed that the fire charred the basket, but made the clay much stronger and water-proof"***. From such discoveries it would be a small step to control management of objects made from clay. Thus a new style of container began and so was the process of firing. One thing that is certain about the two views is that firing pottery was as a result of accidental

burning of basket which provided the early man with the knowledge of firing techniques.

2.2 CLAY:

INTRODUCTION:

In the early times, the only raw material for pottery was the natural plastic clay. In modern ceramics other raw materials have played important roles, but clay is still a major factor according to Singer and Singer (1963).

Clay is an invaluable material for potters and for construction of kilns because it can withstand very high temperatures and retain its colour. Without it, majority of domestic wares could not be made (Leach 1976). Most clay contain nearly 50% of pure clay, while kaolin contains about 95% of pure clay substance.

Singer and Singer (1963) defines clay as follows:

i) as a "secondary rock" which has been formed by weathering of certain other rocks.

ii) that clay is a mixture. He observed that two deposits of clay do not have exactly the same "clay" and frequently different samples of clay from the same deposit differ.

Clay contains 46.5% Silica, 39.53% Alumina and 13.95% water. ($AL_2O_32SO_22H_20$) - Leach (1976) and Singer and Singer (1963).

The impurities associated with secondary clays tend to reduce the refractories of the clay, the fired colour may be whitish, through buff to dark brown depending on the part of proportion and type of metal oxides incorporated into the clay - Hamilton

(1978). Singer and Singer (1963) pointed out that fired colour of clay depends primarily on its percentage of Iron-oxide, state of oxidation of the iron. He noted further that the presence of carbon and sulphur coupled with the oxygen pressure of atmosphere will affect the state of oxidation.

Shrinkage always accompanies the drying of clay and as the film of water between the particle of clay evaporates, the particle draw closer together thus taking up the space previously occupied by the water (Rhodes, 1968). the cumulative effect of each particle drawing closer to its neighbouring particle is the shrinkage of the entire mass. The size of particles will have a decisive effect on the shrinkage of clay, while clay with large particle size will shrink less. But clay with a very fine particle size will shrink more because of the presence of more water in the interstices which close up during drying. "Kaolin" "Cornish", "China Clay" are terms used to qualify a light burning fine texture of clay usually found around its original place of formation. Cardew (1969) expressed that China Clay in nature and in commerce are never quite pure and ideal as the analysis suggest. It does not vitrify at 1300^{oc}, although it is strongly 'Sintered' at this temperature. Its refractoriness is due not only to its chemical purity, but also to its comparatively large ultimate particle-size average about 0.6 to 1.0_{u}^{1} i.e. at least ten times larger than that of a typical ball clay.

Cardew (Ibid) suggest that, a useful bridge between the ultra-fine material which makes up a large part of most plastic clays, and coarser fractions are generally about 10" upwards.

The effective surface area of the ultimate particles of clay is related to plasticity which Hamer (1975) defines as *"the*

property that allows the new form to remain without any attempt to return to the original form". Other factors that influence plasticity are true clay contents, moisture contons, particle size distribution, plasticizers, strength of particle bond - **Cardew (1969).**

2.3 EVOLUTION OF KILNS:

One of the most fascinating aspect of the history of ceramics is the development of the kiln. In the beginning, perhaps as early as 10,000 years ago, there was no kiln, but a depression in the ground filled with raw pots, over the top in which was a bonfire of wood and grass to bake them hard.

Rhodes (1968) said that the earliest kilns, however, were little more than modified bonfires. The exact style of kiln used in prehistoric times is conjectural, but it can be assured that firing methods in the remote past were similar to those practised by the people of West Africa today.

Cardew (1969) says that the most ancient and traditional way of firing is in the open, without any kiln at all. The pots were covered partly by broken shards and the ashes of the flue. This method is still used in many parts of Africa today. One important features of this tradition is that the firing does not take more than two hours and yet the "clamp" contains very large pots (up to sixty centimeters in height with corresponding girth) which in any ordinary kiln would need a firing schedule of at least forty-eight hours. The first stage in the development of kilns was the improvement of the pit to make it retain the heat better and to introduce the fuel in a way which would promote better circulation of heat. A simple and effective improvement of the firing pit was the introduction of holes at the lower part of the pit, which would admit air for better combustion.

Drying of ceramics ware can be done in the open by natural air circulation, at prevailing temperatures. The use of enclosing structures and applied heat, accelerate the process.

Singer and Singer (1963) opined that firing the ware, however, must always be done in enclosed structure with applied heat. He went further to say that the simplest method of burning is the clamp, though ancient as it is, is still used occasionally for hand builts. The bricks are staked alternately with fuel to form a mould and then covered with earth, and fire is set at the bottom which allowed fire to travel through the clamp drawing cooler air after it. According to **Hamilton (1978)** this was achieved by building chequered brick walls between each chamber. The flues are linked to a central flue and chimney with damper located to allow the flow of hot air from the chamber being fired. **Hoffman** designed this type of kiln in 1864. The important aspect about this type of kiln is that the burning time last for about three days, while the bricks are left in the kiln for about ten days - according to **Nash (1966)**.

Rhodes (1968) said that bricks are left for longer days, probably to allow the temperature to rise and after burning, the temperature is subsequently lowered before unloading the chambers. There was a great deal of secrecy in the production of porcelain and the exact date of the early kiln is unknown. **Cooper (1972)** however, pointed out that in Mesopotamia, between 400 - 300 B.C. there was a great development in kiln construction, while in China there was also some improvement of high temperature firing between 100 - 500 years A.D.

The first successful tunnel kiln was designed by **Bock, O. in England in 1877 - Rhodes (1968).** **Bock** kiln was fired by dropping coal through openings in the crown of the kiln which then burned among the setting of bricks. Probably attempt

were not made to fire pottery in the early Tunnel Kilns, because the controls were sufficiently exact for the relatively precise heat adjustments needed for glazes.

In 1710, **Boettger in Germany** developed porcelain and it was during this period that he built a kiln which was able to reach a temperature of refractory clay through the introduction of fireboxes with cast iron grate bars.

2.3.1 UPDRAFT KILN:

Gregory (1984) describes an updraft kiln as an extension of the bonfire or chimney system where fire lit at the bottom of the chamber, travelled up through a chequer system in the floor and passed out through the ware at the top. **Rodes (Ibid)** warns that this type of kiln (design) tends to have cool spots either towards the top, or the middle of the setting. **Gregory (Ibid)** said that one of the drawbacks of this type of kiln was its habit of developing **"Chimneys"** within the chamber. These are areas where the flames path concentrate between pots and the natural path upwards. These "chimneys" become very hot and consequently the pots can be badly over-fired. Other areas of the chamber will be under-fired because heat has been pulled away. Another characteristics of this type of kiln shape is for the lower area to be hotter than the top, thereby causing unevenness in temperature (Fig. 2.1).

2.3.2 DOWNDRAFT KILN:

Olsen (1983) says a downdraft kiln has a draft movement that starts with the inlet flues, circulates in the chamber which passes down through floor exist flues and then flows out of the chimney. He goes on to say that it

provides even temperature with the ability to control temperature distribution and atmosphere with economical fuel consumption. **Brodie (1982)** confirms this statement and I quote that "***It is more efficient than the up-draft kiln***". **Gregory (1981)** pointed out that downdraft kiln tends to fire more evenly because the flames are held in the chamber for a greater length of time. One important thing about this type of kiln is that the flame and heat stay in the kiln for long time and more of the heat can be utilized before exit from the kiln. This is the type of kiln adapted in this study. (Fig. 2.2)

2.3.3 CROSS DRAFT KILN:

Ritchel (1975) defined crossdraft kiln as a kiln in which hot gases travel through the ware across the chamber from a pierced bag wall to exit flues in the opposite wall. It has some of the operational characteristics of a downdraft. The main difference is that heat passes through the ware as in an updraft kiln. **Oslen (1983)** says that crossdraft kilns have a flame movement from the inlet flues on one side of the kiln chamber to existing flues along the opposite side (Fig. 2.3)

From the three basic kiln design options, the kiln designed for stoneware temperatures and above, should either be a downdraft or crossdraft kiln. A level of temperature could be attained in updraft kilns. Some of the advantages in downdraft and crossdraft kilns over the updraft are, fuel economy and even temperature in the kiln chambers.

Hamilton (1978) points out that the amount of fuelling needed by the fire, and its timing, will depend upon the



Fig. 2.1
The up-draught bottle kiln princile.

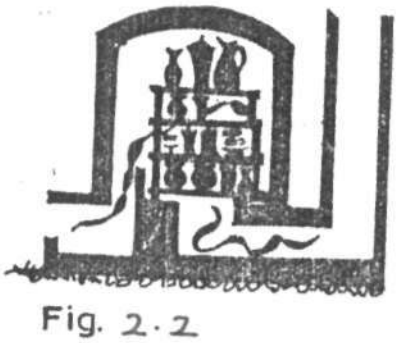

Fig. 2.2
The down-draught kiln.

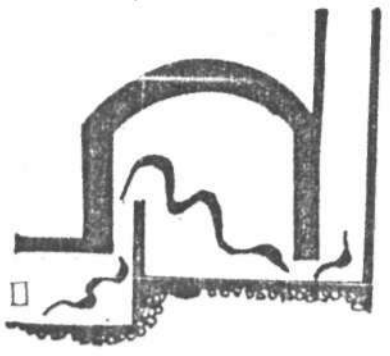

Fig. 2.3
The cross-draught kiln.

amount of organic material present in the clay. some clay require coal before the fire could reach the chamber, while other would require additional coal for firing to reach the correct temperature for the quality of brick desired.

Advancement in kiln design and construction was made in the near - East, Iraq, North Africa and Crete. The Egyptians were said to be the first people to construct early known kilns. Rhodes (1968) noted that the Egyptians' open topped draft kiln (as it is called) reached a temperature of 900^0c or even higher.

The Chinese, Koreans and Japanese were known to have introduced high firing kilns built with a dome. The kilns were similar to "rumbu" in Hausa land. The growing demand for ceramic products led the Chinese to further improve the development of the multi-chambered kilns. Most of these kilns utilized wood as a source of energy. Rhodes (1968) noted that these kilns were superior to any in the rest of the world until recent.

Ceramics art in Chinese is of such antiquity that the design of the earliest kilns were not known. Rhodes (Ibid) said further that at the time people were firing at about 1000^0c, Chinese pottery were fired above 1100^0c. We can therefore infer that the existence of a kiln during this period would reach temperatures higher than any previously attained in other parts of the world. It is worth nothing that in Nigeria, wood kilns were constructed in Suleja, Okigwe, Dankande, Jos and Auchi - Table 2.

Great improvement in kiln design and construction were made in Europe during the Industrial Revolution. Also

improved refractories resulted in better arrangements for the circulation of heat and introduction of coke for fuel, enable the attainment of higher temperature. On the other hand, the success of the tunnel kilns came after the development of efficient oil and gas burners.

There was no rapid development of ceramic studios in Nigeria inspite of Dr. Kwali's pottery centre established in 1952 and Jos Museum pottery established in 1963.

Table 2 below shows the development of pottery centres in Nigeria from 1918 - 88.

TABLE 2:

SOME POTTERY ESTABLISHMENTS IN NIGERIA

S/No.		Place	State	Heat source	Years of Establi-shment
1.	Stoneware Pottery	Abeokuta	Ogun	Wood	1918
2.	Okigwe Pottery Centre	Okigwe	Imo	Wood	1952
3.	Abuja Pottery Centre	Suleja (Abuja)	Niger	Wood	1952
4.	Projects Dev. Institute	Enugu	Anambra	Coal	1958
5.	Jos Museum Pottery Studio	Jos	Plateau	Coal	1963
6.	Niger State (Art & Culture) Pottery	Minna	Niger	Coal	1983
7.	Emodah Pottery	Auchi	Bendel	Coal	1984
8.	Jacaranda Pottery	Kaduna	Kaduna	Gas/Wood	1986
9.	Jan Pottery Studio	Kaduna	Kaduna	Gas	1985

10.	Mararaba Pottery	Dankande	Kaduna	Gas/Wood	1986
11.	Marhal Pottery	Bukuru	Plateau	Gas/Wood	1986
12.	Anthill (David) Pottery	Gboko	Benue	Wood	1987
13.	Levi Yakubu	Makurdi	Benue	Gas	1988

According to **Ewule (1988)** as supported by the Table above, 77% of ceramic pottery centres use wood, and the remaining 23% use gas and coal.

2.4 BRICKS

For several years bricks have been an essential architectural feature - **Hamilton (1978)**. **Nash (1986)** opined that majority of bricks in this country (Nigeria) were made from clay and because of different types of clay which exist. A wide variety of bricks are available, and the bricks sizes have not varied greatly through the ages.

Hamilton (Ibid) and **Nash** pointed out that buildings made of bricks by the Romans were still in first class condition today. the use of bricks is recorded in the ancient city of Babylon about 6,000 years ago.

Nash (Ibid) pointed out that before some types of clay bricks were made, the clay was first weathered. In one method it is stacked in heaps in the open for the rain to wash out the soluble salts which could cause efflorescence or white scum on the surface of the brickwork.

Another method was to wash the clay thoroughly in a wash mill and then store in large open storage areas called clay backs, until they were ready for use. While other methods of clay

bricks, are flettous which are made from unweathered clay. The clay is dug, transported to the grinding mill and a small amount of water is added before the clay is ground finely, pass to the brick making machine.

Hamilton (Ibid) pointed out that the earliest bricks were not fired but they were a mixture of clay and sand reinforced with straw. The clay-sand mixture was probably a natural deposition from the uplifted bed of a lake or river. The straw which was added during the making process, had a similar effect like that of fibre glass in glass reinforced plastic today. Naturally unfired clay bricks, even when reinforced will not last very long in a climate of long duration of heavy rainfall. All bricks meant to be fired must be made of clay that includes some fluxing material, the most common is calcium. Many alluvial clay contain calcium of very fine particle sizes which formed on sea bed may also include calcium in form of shells. These can been seen at times when the bricks were broken in halves during the firing and even some of them do not lose their shapes. The calcium acts upon the alumina and silica present in the clay to produce a strong and dense brick at a temperature of about $1000^{0}C$ ($1830^{0}F$).

Hamilton (Ibid) stressed that if calcium is of sufficient particle size it will not fuse completely with the clay minerals, but remain in dehydrated calcium will absorb atmospheric moisture which would result into expansion. The brick would throw off its finished surface, leaving unsightly craters and if the process continues it will substantially weaken the mechanical strength of the brick. This fault in brick is known as **"spit-out"**. This can be attributed to calcium present in the clay when a large white particle is seen at the centre and lowest point of the crater. Another type of **"spit-out"** is caused by large particles of iron in the form of iron pyrites. This may cause back slag-like particles

as the case of the craters.

2.5 METHOD OF KILN CONSTRUCTION:

INTRODUCTION:

The laying of fire brick in kiln construction is a specialized mansory skill. There are rules which ensure a strong monolithic structure that will function efficiently at high temperatures and durable.

Olsen (1983) and Nash (1966) gave five methods of laying straight walls - ***Header Course or Bond, Stretcher Course, Alternate Header/Stretcher (English) Course, Rowlock and Soldier Course***. According to **Olsen (Ibid)** the header course bricks are laid length-wise across the wall with $2^1/_2$" x 9" side, putting it against the next brick - (Fig. 6). All header course develop a stable wall with minimum hot face exposure ($4^1/_2$" x $2^1/_2$") and the backside of the brick is subject to relatively low temperature. Header course is good for bricks facing high temperature limits. **Nash (Ibid) and Olsen (Ibid)** say that a wall laid mainly of headers and consist of three or four rows of header course to one row of stretcher course (Fig. 7) has the advantage of all header wall with greater rigidity.

Oslen (Ibid) pointed out that stretcher courses are laid length-wise running with the wall so that the $2^1/_2$" x 9" surface becomes the hot face (Fig. 8). **Nash (Ibid)** says all stretcher walls are not rigid and not recommended for a height of 3 feet, unless it has other means of support. **Oslen** pointed out that a wall laid mainly of stretcher course to one header row (Fig. 9) is stronger wall and has a great advantage because a kiln made of bricks are subjected to slagging or other erosive action. This occurs in a wood fired kiln, where the exterior face can be easily repaired by placing $4^1/_2$" x 9"

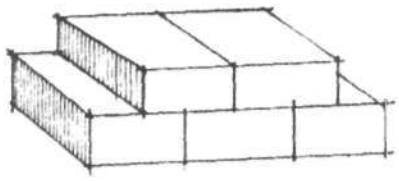

Fig. 6
Header course with bricks laid across the wall.

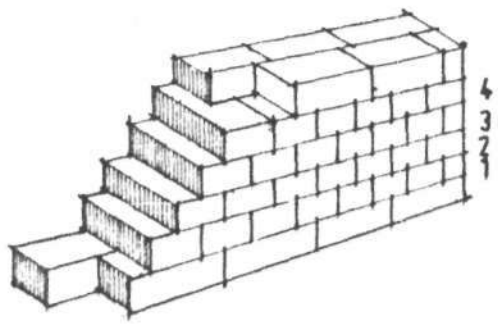

Fig. 7
Alternating four header rows with one stretcher row gives greater rigidity.

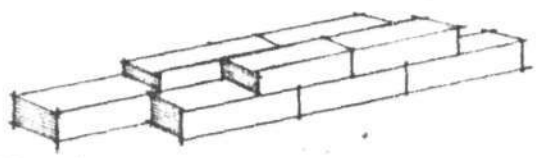

Fig. 8
Stretcher course with bricks running along the wall.

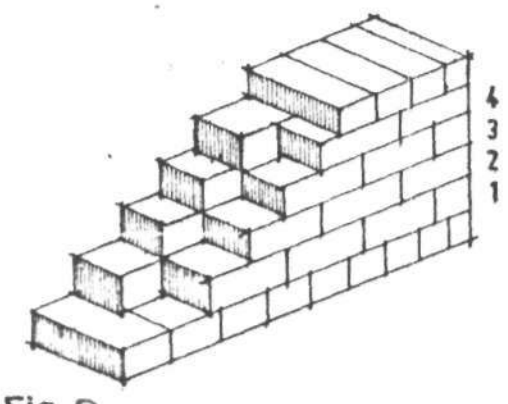

Fig. 9
Alternating four stretchers with one header makes it easy to replace a hot-face brick.

hot face brick with another or a $4^1/_2$" skin wall (ram mix) tied into the remaining bricks. He went further to say that the alternate header and stretcher walls of 9" x $13^1/_2$" thickness are extremely stable. However, **Nash (Ibid)** referred to it as **"English Bond"** and is the most common method of construction using dense firebrick. **Oslen and Nash** pointed out that to begin a 9" wall, a 9" by 6" large brick, a $4^1/_2$" bat, and straight bricks are used to set up the joint pattern for subsequent rows (Fig. 10).

According to **Oslen (1983)** in a rowlock course, bricks are laid on their side ($2^1/_2$" x 2") side to side or end to end (Fig. 11). While in a soldier course, bricks are laid on end ($4^1/_2$" x $2^1/_2$") side to side or end to end (Fig. 12).

Nash (1976) says the term arch is derived from the word **"ARC"** meaning part of the circumference of a circle. He points out that arch does not need additional reinforcement, as brick lintels do, because the units are wedge-shaped. This results into more loads being placed on an arch than the tighter wall which becomes the units in the arch. **Oslen (1983)** pointed out that kiln arches perform two duties viz:

Formation of roofs for the kiln chamber doors and openings. **Nash (1966)** describes the arch of a cylinder as the most common arch used in kiln building. Skewbacks determine the arch rise and tie the arch to the wall (Fig. 13).

According to **Nash (1976)** arches are generally classified into three main groups:

i) Rough arches, in which the joints and not the brick are usually wedge-shaped. Such arches can be used on work which does not require a high standard of finish work or which is to be plastered over.

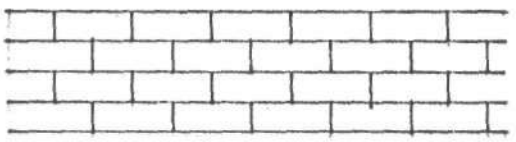

Fig. 10
Alternating joints produce a stable wall.

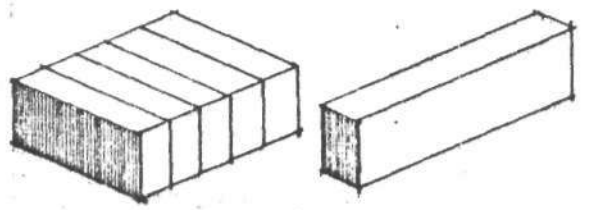

Fig. 11
Rowlock course: (left) side-to-side; (right) end-to-end.

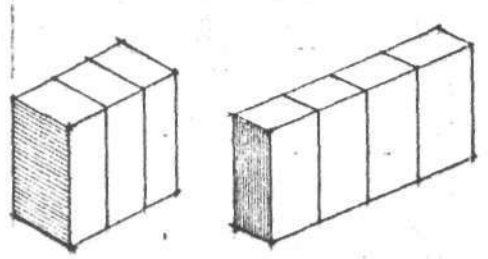

Fig. 12
Soldier course: (left) side-to-side; (right) end-to-end.

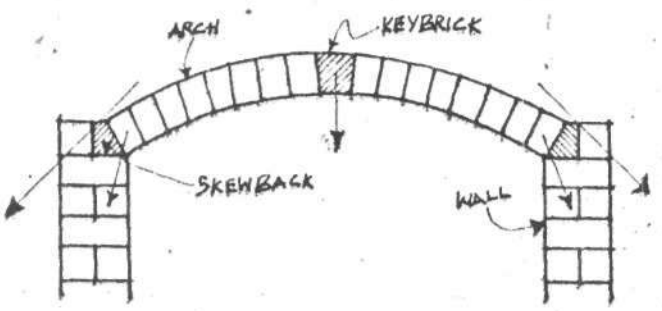

Fig. 13
An arch rests on skewbacks exerting its force down and out.

ii) In fine axed arches the bricks used are all cut to the same shape and size.

iii) Gauged arches are very ornamental and expensive because the bricks require a lot of preparatory work before they can be built in the arch.

Oslen (1983) described four major types of sprung arches: bonded arches, ring arches, ribbed arches and straight arches.

Bonded Arches: are the most commonly used and are considered the best. This is because the joints are staggered, typing the whole arch into a single unit. If one or several bricks fall in a bounded arch, the bricks on either side would absorb the load and the arch remains in place (Fig. 14).

Ring Arches: The ring arch is a row of bricks across the arch brick. If one brick in the ring falls, the whole ring would drop and it is very difficult to replace a ring brick. During firing the rings will expand leaving opening about $^{1}/_{2}$". This can be over come, if the kiln was tied together with steel in which there would be no further expansion. The only advantage of ring is the ease in laying especially within a combination of standard shapes (Fig. 15).

Ribbed Arch: is primarily used in open-hearth furnaces. Ribs provide stability and strength after the intermediate bricks have been eroded (Fig. 16).

Straight Arch: is a bonded arch made with standard 9" x $4^{1}/_{2}$" straight bricks and is used when arch brick are not available. When mortaring the arch bricks, care should be taken to apply the mortar in a wedge form, thus helping to set up the proper wedge (Fig. 17).

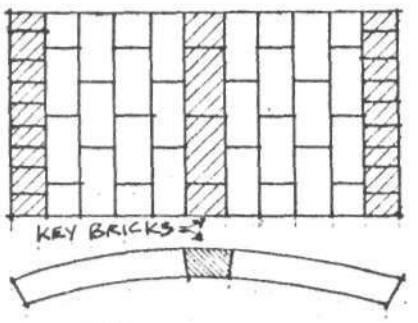

Fig. 14
Joints are staggered in a bonded arch.

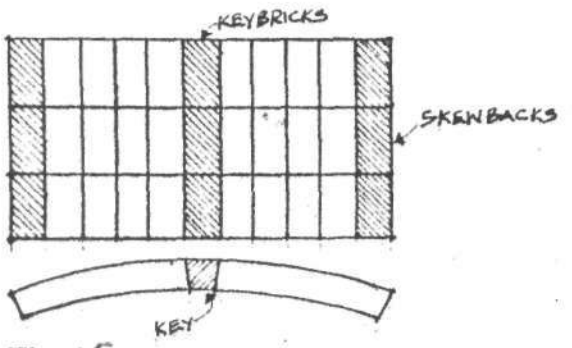

Fig. 15
Ring arches expand during firing and, if one brick fails the whole ring drops.

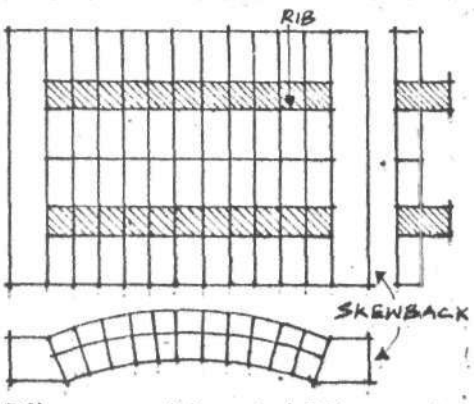

Ribs provide stability and strength against erosion.

Fig 16

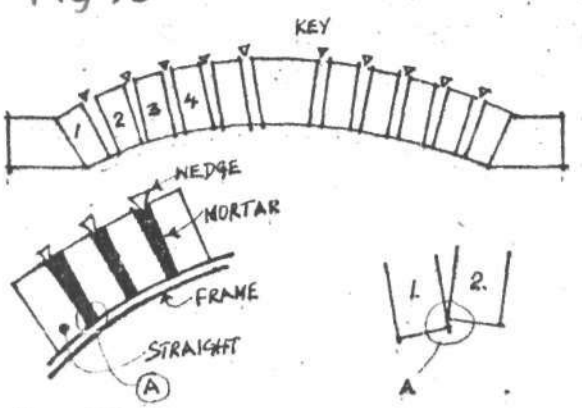

Fig. 17
Proper laying and wedging technique for a sprung arch.

Corbel Arch: is a type of arch seldomly by used. This particular arch can be used to span portholes or flue holes where other lintel shapes are too small. The disadvantages of this type of arches are:

i) structural instability.
ii) uneven inside surface which causes irregular heating and flame turbulence.
iii) bricks are subject to greater erosion; and
iv) the design is generally poor. (Fig. 18)

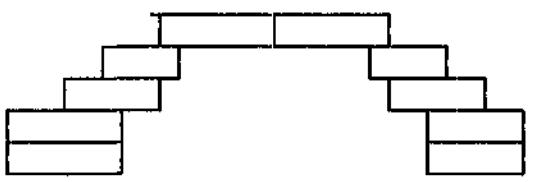

Corbel Arch

2.6 WOOD AS SOURCE OF ENERGY:

INTRODUCTION:

Historically, wood has been used in various applications, as a source of energy for engineering materials. Wood is one of the oldest and is widely used for construction. Also wood had played a major role in the rapid acceleration of technology during the 19th and 20th centuries as pointed out by **Nicholas (1980)**. Probably the oldest use of wood was for fuel, and even today, nearly 50% of the wood harvested worldwide is used for fuel - **Hiser (1978)** and **Nicholas (Ibid)**. Hiser pointed out that wood as a source of energy was the oldest fuel known to mankind. For most Nigerians wood is the chief source of energy.

COMPOSITION OF WOOD:

According to **Hiser (Ibid)** and **Tillman (1978)** wood is composed of variety of substance. In its dry state, the chief constituents are cellulose $C_6H_{10}O_5$, Lignin $C_9H_{10}O_3$ (OCH_3 0-9-1.7), and the hemicellulose ($C_5H_8O_4$) added to these are various ashes forming minerals.

TABLE 2.1

TYPICAL ANALYSIS OF WOOD AND BARK

	Volatile Matter	Fixed Carbon	Ash
Hard Wood			
Wood	77.3	19.4	3.2
Bark	76.7	18.6	4.6
Soft Wood			
Wood	77.2	22.0	1.6
Bark	73.3	23.7	3.0

From the table above it shows that Hard-wood bark has the highest ashes content approximately 5% - **Hiser (1978)**. This therefore shows that the fuel energy supply by soft wood bane is greater than hard wood because of its higher organic contents.

Cardew (1969) pointed out that the calorific value of wood is low (about 8,000 Btu per pound) if compared with good coal which is 12,000 Btu per pound. Fuel oil has about 18,000 Btu per pound and is acknowledged to be excellent fuel for high temperature kilns. Until of recent in Nigeria, wood is widely used for high firing (Table 2). The disadvantages are that it is bulky to store and it involves more labour than other fuels.

Niser (Ibid) gave the heating value of a dried hardwood at about 8,500 Btu per pound, while the hardwood bark is about 8,000 Btu per pound. However, soft wood and the bark have heating value which is relatively constant at about 8,900 to 9,000 Btu per pound. Table 2.2 below shows the typical dry heating value of wood and bark.

TABLE 2.2 - DRY HEATING VALUE: WOOD AND BARK

	Btu/Ib	
	Range	Average
Hardwoods		
Wood	7,590 - 8,920	8,530
Bark	6,920 - 10,310	8,040
Softwoods		
Wood	7,780 - 11,320	8,910
Bark	8,200 - 10,190	8,950

2.8 SOURCES AND STORAGE OF WOOD

The main objective of this project is the utilization of the abundant local materials in Nigeria for ceramic production.

According to Igwilo (Ibid) cordwood is available in many parts of Nigeria. They are more economical than others. Checking with public works departments may indicate wood or trees removed from along streets. Forest departments could sometimes provide, supply and proximity to saw-mills could be an advantage, since they often have scrap either free or at minimal cost. The only disadvantage of fine slabs is the heavy reminant bark which clog up ash pits in the early stages of firing and thereby tends to cause slagging in the flues.

Of the two types of wood used in firing (Hard and Soft), Nigeria is naturally blessed with hard woods (Angioperms) rather than soft wood (Gymnosperms). These include Abura (Mitragya Ciliata), African Mahogany (Khaya Ivorenish),

African Walnut (Lovoa Tricbiliodes), Agba (Osswerodendron Balsamiferum), Cotton wood (Ceiba Pentandra), Ekki (Lophira Alata), Iroko (Chtorophora Excelsa), Obeche (Triplocliton Seleroxylon). Sapele wood (Entandrophragma Cylindricum), Cashew (Anarcadium Occidentale), Oil Bean (Pentacleta Macrophyla), Gmelina (Gmelina Arborea).

Igwilo (Ibid) suggested that the storage of the fuel demands keeping the cord dry, ready for the firing as wood can absorb moisture from the surrounding atmosphere. All wood should be split, where necessary, before firing. Thorough drying of the wood yield the fullest potential heat value; green wood gives only about 80 percent of the valuable heat compared to air-dried wood (fuel exposed to the atmosphere from six months to a year). If wood is split into suitable thickness (2 - 4 inches), drying is hastened.

An open walled shed, allowing adequate air movement is probably the best way to store wood for firing. It has been observed that wood containing about 20 percent of water (a normal percentage for air dried wood) uses more than one-third of its energy for water vaporization **(Alexander 1976)**, rotten or very old wood on the other hand has lower heat as to thick bark of roots.

2.9 COMBUSTION:

Oslen (1963) defines combustion as a reaction which produces detectable heat and light. Very rapid combustion can lead to an explosion. If combustion occurs in gas, a flame is produced. Solids such as wood and coal, which volatilize into gaseous materials at combustion temperatures, also produce a

flame. The temperature at which a material will begin to burn is called **"kindling temperature"**. To start combustion,

however, it is generally necessary to apply a flame. **Oslen (Ibid)** said that hydrocarbons have a great affinity for oxygen and with excess oxygen hydrocarbon will burn to form carbon-dioxide and water, producing complete combustion. The complete combustion of a simple hydrocarbon such as methane is as follows:

$CH_4 + 2O_2$ ---- $CO_2 + 2H_2O$ plus heat energy (i.e. exothermic).

2.10 RATE OF COMBUSTION:

Oslen (Ibid) gave the factor affecting the rate of combustion of hydrocarbon fuels as the intimacy of the fuel with the air supply. The highest rate of combustion obtained when a gaseous solution is formed, that is propane and air. The least intimate mixing is obtained when a non-volatile hydrocarbon in massive form (such as Asphalt) is exposed to air. The intimacy of wood depends upon the size and surface area exposed whether it is hard of soft wood. If the concentration of the fuel or oxygen is too low, combustion proceeds slowly. But if the fuel-to-oxygen ratio is correct, combustion proceeds rapidly. He went further to say that one cubic foot of methane (natural gas) required two cubic feet of oxygen for complete combustion. Air has 20% oxygen and 80% Nitrogen; therefore to obtain 2 cu 2ft of oxygen, 10 cu ft of air must be supplied to burn 1 cu ft of natural gas = 1000 BTU.

Oslen (Ibid) pointed out that if sufficient oxygen is not available, the reaction becomes more complicated. Carbon, carbon monoxide, carbondioxide, hydrogen and steam can be formed. Clays and glazes (glass) are likewise affected, sometimes adversely. But if a reducing atmosphere is started soon (649^0C, 1200^0F) and maintained heavily throughout the firing, the pottery will probably be carbon coded and is detrimental to the clay body.

Cardew (1969) says a rise in kiln temperature means that the rate of combustion increases and more heat is liberated in a unit time. Rising temperature also means that there is a greater loss of heat to the surroundings. One of the functions of the kiln is to hold heat loss to a minimum. The temperature reached during combustion depends on the rate of heat production and the rate of heat loss.

Franz (1970) says that wood burning kiln needs sufficiently large fire boxes to reach stoneware temperatures. One square foot of fire box should be allowed for every five square feet of kiln floor. To facilitate the best possible combustion, they should provide space for ashes and amply oxygen supply.

Igwilo (1982) pointed out that wood in terms of solid fuel for kiln firing has always been regarded as the most desirable. It is relatively pure (i.e. in its composition it has no materials which are detrimental to the ware, such as sulphur compound) rather it burns with a long flame which is helpful in producing even kiln temperatures. This leaves little residue and is capable of reaching the highest temperatures needed in pottery, while the falling ash often form glazes on the surface of the wares.

CHAPTER THREE

RESEARCH PROCEDURE

A descriptive research was adopted so as to understand the use of the product. The essential material used was Kaolin brought from Kankara in Katsina State.

The kaolin was tested for:

i) Shrinkage.
ii) Water absorption and apparent porosity.

The following methods were employed in the study:

1. Location of materials.
2. Clay or dimensional Change (Linear) Determination.
3. Drying and Firing Shrinkage.
4. Water Absorption Determination.
5. Water of Plasticity.
6. Production of Insulating and Dense Bricks.

3.1 LOCATION OF MATERIALS:

Kaolin can be found in the following places in Nigeria:

TABLE 3.1

	Place	Materials	State
1.	Alkaleri	Alkaleri Clay	Bauchi
1.	Batati	Batati Clay	Niger
3.	Onibode	Onibode Clay	Ogun
4.	Osili	Osili Clay	Ogun
5.	Kankara	Kankara Clay	Katsina
6.	Ado-Awaye	Awaye Clay	Oyo

TABLE 3.2

Clay	Resistance Underload	Sintering Temperature
Alkaleri	1700°C	1500°C
Batati	1600°C	1500°C
Kankara	1400°C	1200°C
Onibode	1730°C	1600°C
Osili	1730°C	1650°C

Clay from Kankara discovered by **Gukas (1985)** and **Okoruwa (1986)** was found to be refractory which could be used for stoneware and porcelain respectively.

Ewule (1988) quoting from **Ahmed (1986)** that refractory clay should posses the under-mentioned qualities:

a) Rigidity,maintenance of size, shape and strength at the operating temperature.
b) Ability to withstand thermal shock or thermal gradient during heating and cooling of furnaces.
c) Resistance of chemical attack by whatever wood flame slag or material likely to be encountered.

These qualities are determined by the properties of the refactories.

Some of the most important properties considered in the study are:

~ Drying, fire shrinkage, absorption, apparent porosity and the mixture of Kankara Clay with saw dust.
~ Saw dust burnt out in the kiln left pores thereby increasing the air content and causes heat not to be freely conducted in the structure.

Gilchrist (1963) pointed out that kiln construction requires some degrees of porosity which is desirable. This quality gives the kiln much value as heat insulation. Other materials like grass, rice hust, wheat hust or paper can be used also.

3.2 LINE BLEND:

Several body compositions of Kaolin and saw dust in the refractory areas of line blend were made (Table 3.3). Volumetric measurement was used in the mixture. Okunna (1983) described the line blend test as a method of exploring the material behaviour under heat of selected pairs of materials (in this case, clay and saw dust). The "10 line blend" type was used as shown below:

TABLE 3.3

THE TEN LINE BLEND TEST

Sample No.	1	2	3	4	5	6	7	8	9	10	11	Sample No.
Kankara Clay	10	9	8	7	6	5	4	3	2	1	0	Kankara Clay
Saw-dust	0	1	2	3	4	5	6	7	8	9	10	Saw-dust

Area from which the test was taken

From each sample, 3 test bars were made. A tile cutter was made to cut cubes of bricks, labelled and set aside for drying before firing.

3.3 DRYING AND FIRING SHRINKAGE

TEST "A" DRYING SHRINKAGE:

The amount of shrinkage in a clay is an important characteristic in finding the degree (e.g. high, medium of

low) of the plasticity and of its character or quality (e.g. sticky, waxy etc.) In this test the linear shrinkage was determined.

PROCEDURE:

1. From a well kneaded mass of clay of three bars the following dimensions were made: 130mm long 40mm wide and about 10mm thick.
2. One of the face of the 100mm mark was ruled with a biro point. Table A1.

TABLE A1

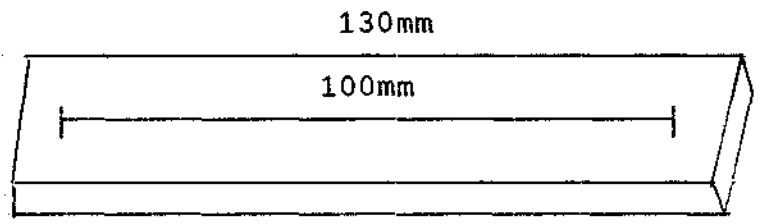

3. The tiles were allowed to dry for 24 hours and turned frequently to avoid warping.
4. The original 100mm line was remeasured and the percentage linear shrinkage was calculated.

$$\frac{\text{Plastic length - Dry length}}{\text{Plastic length}} \times 100$$

Original distance between marks in plastic condition = 100mm
Distance between marks at dry stage = 95mm
Shrinkage (100 - 95) = 5mm

$$\text{Percentage} = \frac{100 - 95 \times 100}{100} = \frac{5 \times 100\%}{100} = 5\%$$

3.4 TEST FOR FIRING SHRINKAGE:

Firing shrinkage was determined on sample that were fired at different temperatures. This gave an idea of the progressive tightening of the clay with increasing temperature.

PROCEDURE:

1. The dried test bars were fired.
2. the length of the ruled marks were measured.
3. The calculation of the firing shrinkage was done using the following formula - (Rhodes 1977).

Percentage linear shrinkage =

$$\frac{\text{Dry length - Fired length}}{\text{Plastic length}} \times 100$$

i.e. Distance between marks after firing = 95mm

Firing shrinkage = 95 - 92mm

= 3mm

$$\% \text{ of Fired shrinkage} = \frac{3 \times 100}{100}\ \% = 3\%$$

Total shrinkage was calculated as follows:

Percent linear shrinkage = (Rhodes 1977)

$$\frac{\text{Plastic length - Fires length} \times 100}{\text{Plastic length}}$$

$$= \frac{100 - 92 \times 100}{100}$$

$$= \frac{8 \times 100}{100} = 8\%$$

3.5 TEST FOR WATER ABSORPTION OF FIRED CLAY AND APPARENT POROSITY:

Water absorption test determined the weight of water absorbed by a test bar as a percentage of its dry weight. The apparent porosity expressed the volume of the unsealed pores in a piece which is expressed as a percentage of the volume of the test bar. The test block from the shrinkage test were weighted and

immersed in water and boiled for at least two hours, the water wiped off and weighed again. The apparent porosity was given by: Saturated (soaked) weight x 100 / Dry weight = Water absorption

Saturated (soaked) weight x bulk density of the test bar / Dry weight = Apparent porosity

The bulk density of most bodies used by artists potters is between 2.0 and 2.5. **McMeekin (1967)** suggested that a rough estimate of the apparent porosity could be obtained by doubling the water of absorption. The results of the tests are contained in Table 3.4.

TABLE 3.4

SHRINKAGE, WATER ABSORPTION AND APPARENT POROSITY:

S/No	Line Blend		Measurement			Total Diff. Wet & Fired	Water Absor-ption		Water Absor ption	App-arent Poro-sity
	Kao lin	Saw dust	Wet (mm)	Dry (mm)	Fired (mm)	%	G W	D W		
1.	10	0	100	96	90	10	112	98	14	28
2.	9	1	100	96	88	12	111	97	14	28
3.	8	2	100	95	88	12	108	90	20	40
4.	7	3	100	97	91	9	107	88	23	46
4.	6	4	100	96	92	8	110	88	28	56
6.	5	5	100	96	90	10	119	77	34	68
7.	4	6	100	96.5	91	8	121	72	41	82
8.	3	7	100	98	92	8	122	63	51	102

SHRINKAGE, WATER ABSORPTION AND APPARENT POROSITY RESULTS:

There is a remarkable pattern of increase in water absorption and apparent porosity in the table (see Table 3.4) with an

increase in saw dust, the absorption and apparent porosity increased. This is so because the bricks not only alter the weight per unit volume by making the refractory more or less porous, but they are capable of reducing the heat capacity per unit column by approximately a half.

Sample No. 1 with only 10 Kankara, water absorption 14 and apparent porosity 28.

Sample No. 5 doubled the figures. This means that Number 5 is capable of reducing the heat capacity much more than the Sample No 1 (See Table 3.4) They have bearing on each other.

McMeekin (1967) revealed that every porous bodyes is always soft, easily broken and have low resistance to mechanical shock.

It was discovered that the last two mixtures i.e. Kaolin 3, Saw-dust 7 remained very soft even when fired to $1280^{0}C$. The pores in the bricks were too big and form many systems stretching continuously through the whole thickness of the bricks. This kind of brick produces a good deal of heat which is transferred by radiation and conduction.

3.6 PRODUCTION OF INSULATING AND DENSE BRICKS:

Three brick moulds were made for standard arch and standard feather-edge. The standard brick is:

1. 24cm x 7.5cm x 12cm
2. Arch brick 12cm x 7cm x 6cm x 1cm
3. Standard feather-edge brick 24cm x 12cm x 7cm.

Provision for shrinkage was made with additional centimeter. The range of the insulated brick (Kaolin 5, Saw dust 5) determined from the previous tests (Table 3.4 was used in

producing the required bricks. In choosing the mixture it was discovered that, if there were excess saw dust in the blend as in sample Numbers 8, 9 and 10, the bricks shrunk considerably at high temperatures. The bricks will devitrify and crystalize to mullite, cristobalite and render the bricks very brittle. On the other hand, if little saw dust is added as in sample numbers 2, 3 and 4 the bricks would be dense, thereby causing heat to conduct freely.

The bricks were made by hand using the slopped method - **Cardew (1975)**. The clay is watered, heaped up and left to soak for about three days to enable water penetrate into the clay particles. It was mixed several times with shovel to ensure the right constituent. Fig. 3.1 (a)



Fig. 3.1(a) Mixture of Kaolin and Saw-dust (50 by 50) for brick making

To produce bricks, the frame was dipped into the water and immediately laid on the ground. It was filled with the slop

producing the required bricks. In choosing the mixture it was discovered that, if there were excess saw dust in the blend as in sample Numbers 8, 9 and 10, the bricks shrunk considerably at high temperatures. The bricks will devitrify and crystalize to mullite, cristobalite and render the bricks very brittle. On the other hand, if little saw dust is added as in sample numbers 2, 3 and 4 the bricks would be dense, thereby causing heat to conduct freely.

The bricks were made by hand using the slopped method - **Cardew (1975)**. The clay is watered, heaped up and left to soak for about three days to enable water penetrate into the clay particles. It was mixed several times with shovel to ensure the right constituent. Fig. 3.1 (a)



Fig. 3.1(a) Mixture of Kaolin and Saw-dust (50 by 50) for brick making

To produce bricks, the frame was dipped into the water and immediately laid on the ground. It was filled with the slop

producing the required bricks. In choosing the mixture it was discovered that, if there were excess saw dust in the blend as in sample Numbers 8, 9 and 10, the bricks shrunk considerably at high temperatures. The bricks will devitrify and crystalize to mullite, cristobalite and render the bricks very brittle. On the other hand, if little saw dust is added as in sample numbers 2, 3 and 4 the bricks would be dense, thereby causing heat to conduct freely.

The bricks were made by hand using the slopped method - **Cardew (1975)**. The clay is watered, heaped up and left to soak for about three days to enable water penetrate into the clay particles. It was mixed several times with shovel to ensure the right constituent. Fig. 3.1 (a)



Fig. 3.1(a) Mixture of Kaolin and Saw-dust (50 by 50) for brick making

To produce bricks, the frame was dipped into the water and immediately laid on the ground. It was filled with the slop

of clay and levelled off by hand or with a flat stick. Fig. 3.2 The frame was then lifted off leaving the brick on the ground to be lifted up on its side when the surface stiffened to be dried before firing. Fig. 3.2



Fig. 3.2 Brick making using slop method

The bricks were fired to cone 10 (1300^{0}C) in order to avoid further shrinkage when fired above the bricks temperature.



Fig. 3.2 (a) Bricks lifting on the ground by its side.

CHAPTER FOUR

KILN DESIGN AND CONSTRUCTION

The first step was to select a desirable site. The kiln was an outdoor type and was located at about 30 metres from the nearest building with a space of 6-8 metres cleared.

This chapter deals mainly with the design and construction of an efficient wood firing kiln for a stoneware temperature. From the pilot study carried out and going by **Ewule's (1988)** statistics of ceramic studios in Nigeria indicate that about 77% of the ceramic studios use wood which is most economical fuel at the moment. Table 2. There is abundant wood throughout the country which is cheaply procured. In Nigeria today, it is not economical to produce electric kiln because of non-availability of kiln elements. From a pilot study carried out, it was discovered that kilns were not functioning in some of the Federal and State Institutions especially in Oyo State.

The availability of gas is confined to metropolitan areas. This is a factor that militates against the development of pottery industries in the rural areas. Besides the supply, the cost of gas is exorbitant and fluctuates.

4.1 POINT CONSIDERED:

The first point considered was the question of size. A small kiln which can hold enough wares would be built at a reasonable cost. The choice of an efficient kiln size is 16 - 20 cub.ft (0.29 - 0.37m) if stack space was desired.

4.2 MATERIALS

The first thing considered when deciding on materials for the kiln building was the type of wares to be fired.

Insulating refractory bricks were used and other materials provided for a stone-ware body.

1. Standard Feather fire Bricks (Quantity 1,150 Hard Dense): are used to withstand various temperatures, their physical properties and their chemical composition. **Gregory (1988)** points out that feather brick soaks heat and takes longer duration to cool than high temperature insulating brick. But solid fire bricks have a longer working life and better resistance to slag attack chipping (Spalling).

2. Low Duty Brick: (Quantity 650) **Gregory (Ibid)** says it is generally used as a back-up brick, but not to be used for a firebox or in an extreme hot face area.

3. Angle Iron (Quantity 6) are used only to brace the whole structure and for building grates.

4. Hardboard: (Quantity 1 (0.6 x 120 x 240)cm. Hardwood (5 x 31 x 360cm) are used for the construction of the kiln arch.

5. Cement: (Quantity 3 bags and $^{3}/_{4}$ gravel) were mixed together for the foundation of the kiln.

4.3 KILN FOUNDATION:

A wooden frame was made in which the concrete slab was poured. The floor concrete was made from the mixture of gravel, sand and cement in the ratio of 5.3.1 respectively. The concrete was then poured half-way inside the frame. It was then rake levelled. The foundation was 15cm thick so as, to prevent moisture from rising into the brick work by capillary attraction and to keep rain water from running into the fireboxes. The top was immediately smoothened to fill all

parts of the frame evenly. This was done by using a simple straight plank of 2" by 4" about 2 feet longer than the width of the frame. The surface of the concrete was also smoothened by resting the plank on the edge of the frame and sliding it across the surface, using a back and forth motion. The slab was kept wet by covering it with several thickness of wet banana-leaves. **Roger, Sylvia and John (1977)** pointed out that keeping the slab wet during the curing period makes it stronger.



Fig. 4.1 Concrete Foundation

4.4 MORTAR:

The mortar for laying the brick work was made from mixing kaolin and saw-dust 50:50 respectively with a tea spoonful of Sodium Silicate. This mixture was used to bind the bricks

together as well as to level the irregular bricks. The mixture was left in a large basin for a week. **Olsen (1983)** felt that the mixture has an advantage over cement because it is easy to remove the mortar brick work if the kiln would be dismantled for any reason.

Rhodes (1968) felt that the purpose of a mortar was not to stick the bricks together, but to level them up and to provide a solid bed for each brick.

Gregory (1984) pointed out that the mortar serves to fill the cracks and makes it more air-tight structurally.

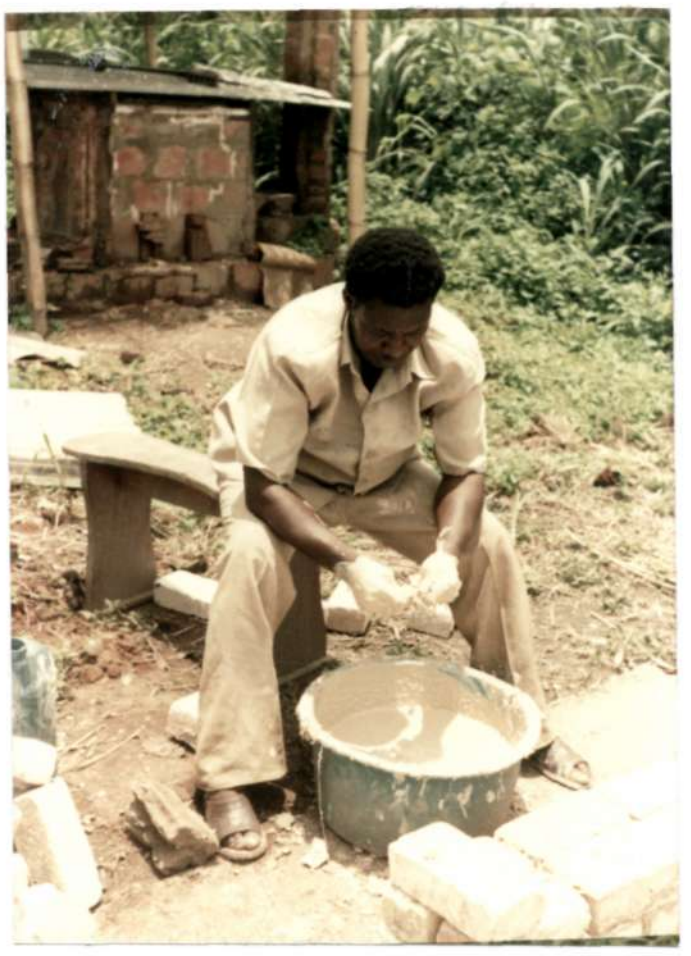

Fig. 4.2 Mixture of Kaolin, Saw-dust and Sodium Silicate

The most important factor in kiln brick work is to keep each course level straight. During the laying of the brick-work, allowance was made in the structure for expansion because the kiln would move and swell with the heat. The mortar was applied by dipping the brick into it using hand and trowel Fig. 4.3. In order to tap the brick into position **Rhodes (Ibid)** suggested that the bricks be dampened to prevent quick sucking of mortar which could be too stiff.



Fig. 4.3 Application of Mortar with Trowel

Two fireboxes of equal size directly under the kiln chamber were constructed with suitable materials to insulate against heat loss and withstanding high temperatures. An internal grate was made of angle: iron, welded as shown in the diagram. Fig. 4.4



Fig. 4.4 The Grate - a frame with iron bars for holding wood in the fire place.

The grate is placed far into the firebox, so that part of the grate is directly under the inlet flue to the chamber above.

Fig. 4.5



Fig. 4.5 "A" in the picture is the firebox where the grate is placed.

4.5 FLOOR:

The bricks were laid length-wise following the flue direction. For maximum strength the bricks were laid in header courses parallel to the wall. Fig. 4.6



Fig. 4.6 Laying of bricks length-wise following flue direction.

4.6 THE WALL:

Just like the floor, the wall bricks were laid in header courses and tied every fourth row by a stretcher course. Stretcher courses are bricks laid at right angles of the wall. Rhodes (1983) pointed out the important aspect in construction of a brick wall is to keep the structure level and plumb. In order to achieve this, each brick was carefully placed and tapped with hammer or towel until it lined up perfectly with the rest of the structure. This keeps the structure firmly linked together from the inside course to the outer. Care was taken with the construction of the corners, and a builder's

line was used, to keep the brickwork straight and to ensure the level often.

When half bricks were needed the bricks were cut round including the four corners, with chisel. The cutting was done

on a base of sand to prevent splitting and the rough edges were grounded up on a rough slab. **Gregory (1981)** suggested the use of saw blades for cutting soft bricks. A carborundum disc was strongly recommended.

4.7 DOOR:

The door was built in the walls to support the crown and a separate arch was built for the door using the same method for the crown for this study, it was felt that the bricking method would be enough. The door is expected to be closed with bricks before each firing. The opening was plumbed with the sides parallel and squared to each other. In closing the door the bricks were tied more often with stringer and soldier courses. The bricks to close the door before firing could be of generous sizes for easy loading. Fig. 4.7



Fig. 4.7 The door and chimney

A small kiln is not so economical, but the chamber can be fired repeatedly thereby residual heat is left behind by consecutive loading of pots. Large kilns require longer intervals between firing and failure can be disastrous because of the great loss. Too small a kiln, on the other hand, will result into a restriction of the size of wares to be produced.

4.8 <u>ARCH:</u>

A mould was constructed to hold the arch in the correct position on the walls during construction. It was made of wood with three templates, for the inside arch shape. Hardboard was attached over this mould to make it rigid. The mould was placed in between side walls, and the arch was done the same way as the walls starting from the two sides working towards the centre. The joints were broken and the centre course of the wedges fits tightly and neatly. The centre was driven down with a brick hammer and wood block. When this was done the arch was left for a week to dry.

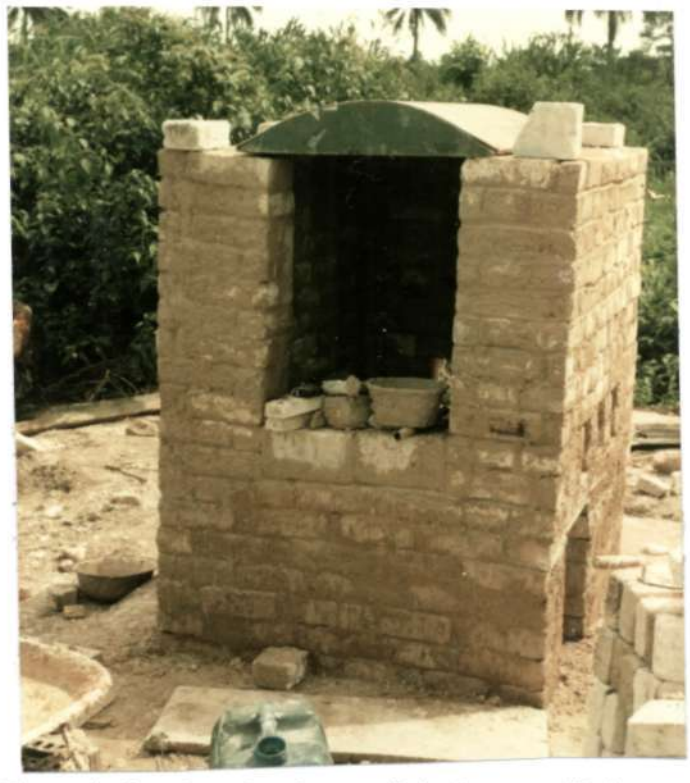

Fig. 4.8 An Arch mould in position

4.9 DAMPER

A damper was made of brick, large enough to cover the flue opening fixed at the base of the Chimney. The damper is used to cut down the pull on the Chimney, thus helping a reduction of atmosphere in the kiln. A damper plate was made and this helps in adjusting the pull in the Chimney, preventing cold air from being drawn into the chamber through the fire mouth; both during and after firing, when a slow cooling down is required.



Fig. 4.10 The Damper Position

4.9.1 CHIMNEY:

The chimney foundation was built with red bricks to a height of 60cm and later fired bricks were used and the chimney was built to increase the draft. **Rhodes (1986)** suggested that the chimney cross section should be equal at least to that of the flue and each of the horizontal flue must be compensated by 60 additional centimeters. **Olsen (1981)** suggested that the chimney height should be three times the height of the kiln's chamber, plus the height of the firebox, and additional 30cm for every 90cm of horizontal travel of the flue gases. For altitudes over 4,000 feet required an additional 90cm chimney. The chimney should be increased by 50% and exit flue size by 40%.



Fig. 4.11 A Back view of a chimney

4.9.2 IRON WORK:

Five centimeter of angle iron was used for the framework, bolted with adjustable tie rod crossing from corner to corner.

CHAPTER FIVE

KILN OPERATION, FIRING TESTS AND RECOMMENDATIONS

INTRODUCTION:

In the bonfire system pots are stacked upon one another in a closely packed mass taking care to ensure that the pieces fit together. With the introduction of glaze firing, arrangement have been devised to prevent pots from sticking together.

Shelves and Props are the most important furniture for setting the kiln. **Olsen (1983)** recommends (30 x 60 x 2.5)cm as the size of shelf made from fired clay and refractory grog. The shelves made are given a coating of kiln wash to prevent any glaze dripping on the shelf from sticking permanently. The props are made from cutting standard brick length-wise to get longer props.

5.1 PACKING:

The packing is open without the use of Saggars. Care is taken while packing the wares. If they are packed, touching each other as in bisquit firing, the melting glaze would stick the wares together. This flaw is termed as "Kissing". A gap of about 2.5cm between each ware is left to prevent any danger.

Olsen (Ibid) recommends that shelves should be set out in triangle. **Benjo (1982)** points out that the three props support would not only conserve the number of props used, but enable the three props to carry the load equally. However, the props can also be laid length-wise to act as a bag wall as shown in Figs. 5.1 and 5.2 on pages 70 & 72 in the appendix.

5.2 PRE-HEATING:

The firing processes and their relation to pottery is important and **Rhodes (1986)** regarded them as critical. When firing is successful, the fruits of all other processes are

realised. By the same token if the firing process fails all other things are forfeited. Most combustion system rely on Secondary air to burn solid fuels efficiently. Olsen (1983) points out that the lower the percentage of primary and secondary air will increase flame temperatures and saves fuel making the combustion to perform better. At this stage, the firing is gradual to allow escape of moisture and silica inversion takes place before the full firing. The damper is $^{3}/_{4}$ closed with spyhole open for 50 minutes and stocking one firebox with kindling.



Fig. 5.3 Pre-heating duration in the first firebox (50 minutes)

5.2.1 FULL FIRING:

a) **Bisquit Firing:** The purpose of the initial firing is to harden the clay forms making them readily handled in glazing and to eliminate the danger of glazing clay, as a result of saturated water which could crack, if not deformed during the glazing process. This firing is carried-out at a temperature lower than that required to matured the clay body. **Rhodes (1986)** says cone 04 body is used and subsequently be glazed with cone 04, better still cone 09 firing will serve nicely for the bisquit fire. **Hamilton (1974)** suggests 1050^{0}C (cone 04) for bisquit temperature as the most convenient.

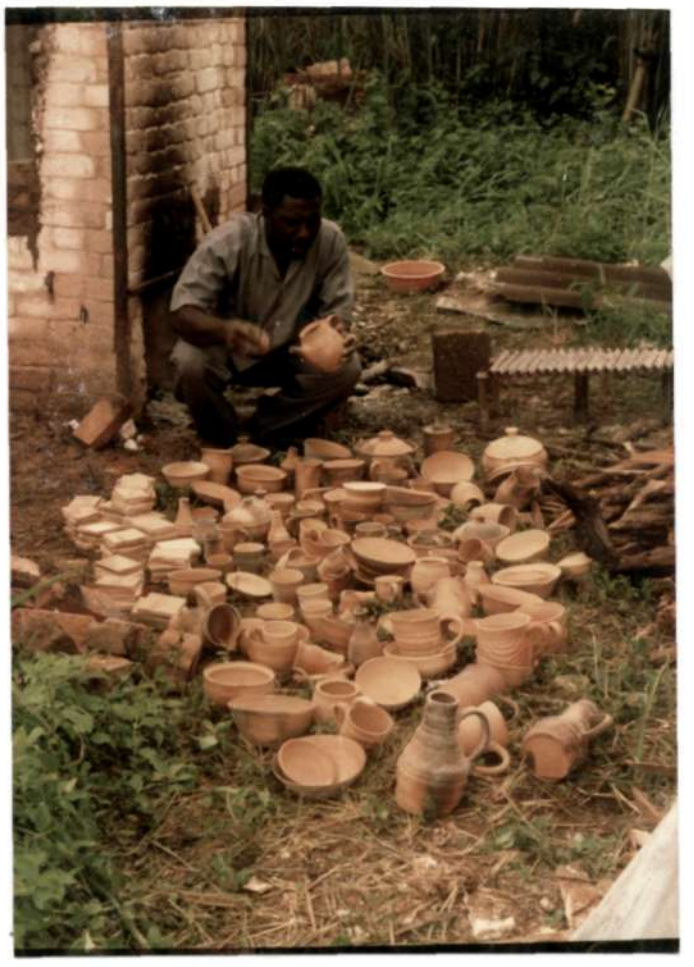

Bisquit firing result

b) Glaze firing: During glaze firing the damper is properly set leaving it 1/4" open. Stocking starts with one firebox with kindling for about 50 minutes until a bed of charcoal is accumulated. **Olsen (1986)** contends that at this point the temperature in the second firebox is around 540^0C - 590^0C. Firing in the second firebox begins when the wood combusts on the grates, the flames and hot gases roll in two direction into the chamber through its inlet flues. In about one hour the fireboxes will take only 4 to 6 kindling size pieces in every 3 minutes. When one firebox is stocked with 4 to 6 pieces, the other side may need one or two to carry it through until it turns. As the wood burns, the ashes drop to the bottom of the ashpit. Intermitently, a long iron poker with a hooked end is used to rake down the coals out of the firebox and beat down the wood on top of the grate, so that more oxygen is available. Fig. 5.5. The fireboxes are never stocked fully at the same time and care is taken to prevent choking. If choking occurs, it might retard the firing. A spyhole is made at the top and is opened at all times. The flame that will emerge is observed from the spyhole and also from the chimney smoke. When the flame sucks back into the kiln and the chimney is cleared, it is an indication for time to stoke. **Olsen (Ibid)** observes that this is the critical time and the temperature is around 590^0C - 1090^0C. After the firing, the grate is pulled out of the firebox, otherwise it will warp as a result of oxidation.



Fig. 5.5 A long iron poker with a hook end used in raking down the charcoal and ashes from the fireboxes

5.2.2 COOLING:

Normally, a kiln will cool gradually when the fuel supply is cut off. The kiln is left to cool down gradually also after the cone 9 had fallen. The damper is fully pushed in the spyhole and firebox are properly closed. It is allowed to cool down before the bricks are taken down slowly brick by brick. A row of two layer of bricks is removed every fifteen to twenty minutes so as to prevent draft of cold air sticking the pots which may cause a crack.

Hamilton (1974) suggests that the cooling should take the same time of firing because during cooling the glaze and clay will harden and shrink. Hamilton (Ibid) and Green (1973) gave four important points on cooling of glaze firing, namely:

i) Slow cooling between 900^{0}C - 800^{0}C will encourage crystals to grow in glazes which is essential for the formation of glazes. Non-crystalline shinning glazes can be cooled rapidly to 700^{0}C.

ii) Between 600^{0}C - 500^{0}C the invasion of the beta quartz to alpha quartz takes place. This is accompanied by one percentage shrinkage.

iii) The beta cristobalite formed between 1100^{0}C and 1300^{0}C during the firing reverts on cooling to alph-critobalite between 260^{0}C and 220^{0}C with a shrinkage of 3 percentage.

iv) Between 163^{0}C and 117^{0}C beta tridymite is inverted to alpha tridyite and suddenly accompanied by 1 percentage shrinkage.

5.3 FIRST FIRING:

The first firing in this kiln took a long time. This was probably due to the moistured steam in the kiln and the concrete foundation. The kiln was built during the rainy season. Pre-heating for fifty minutes and after eleven hours, the firing was terminated. Only one of the kiln reached cone 9 (1280^{0}C). At the end of the firing, it is discovered that a quarter cord of wood was used, which was quite economical.

Fig. 5.6.



First Glaze Firing Result

5.3.1 **RESULT:**

From the above result, the first firing took eleven hours to reach cone 9 (1280^{0}C) the required temperature. the cone 9 at the top was bent, while the bottom cone bent slightly. It was noticed that the wares at the lower shelves were underfired which was probably due to small

pieces packed at the base. Olsen (1983) points out that if the space at the base is not enough, the suction effect of the chimney pulling out draft will lower the temperature at the base upwards. It is also noticed that if tall pieces of wares are packed first this will allow maximum draft and enough free circulation of heat within the chamber.

5.4 **SECOND FIRING:**

From the result of the first firing, the method of firing was changed as a result of some variables which might have worked against the success of the first firing. Among the variables are sizes of wood, and re-adjustment of the bottom shelves. Olsen (Ibid) suggests minimum of $4^1/_2$" raise of kiln shelves from the kiln floor, closure of the exit flue when poking and readjustment of the grate. After the first firing, the kiln had received maximum heat and a lot of heat will no longer be used for the kiln walls.

In stocking the kiln, the bottom shelves are raised to 6" from the floor. The shelves are gapped, staggered about 2" apart, and tall pieces are packed at the lower floor, to allow enough room for the draft to move easily through the floor, and enable the temperature to rise. Whenever it is time to poke, the exit flue is closed and a long iron poker with a hook end is inserted through the firebox to rake, and clear some of the charcoal and ashes out of the firebox which had been beaten down on top of the grate to allow more oxygen. The closure of the exit flue is to reduce the amount of flying wood ash. The grates are readjusted by placing them far back in the fireboxes and more soft wood are used after the pre-heating, because they explode quickly, giving an extremely long flames and heat moves quickly in the chamber.

5.4.1 **RESULT:**

With the readjustment and maximum heat the kiln received during the first firing it took only $5^{1}/_{2}$ hours to reach cone 9 ($1280^{0}C$) and less quantity of firewood (seasoned Afara) was used. There is no doubt that the adjustment made on packing, arrangements of shelves, type of wood used and the precautions taken in the process of firing, produced good firing. There are differences in some glazes due to the fly-ash deposited on them, and a little warmer colour of the clay body due to wood reduction.



Fig. 5.7 Second Glaze firing Result

5.5 THIRD FIRING:

The soap trick is made at the end of the exit flue in the second firebox (Fig. 5.10 on page 77 in the appendix. The trick brick is used to block the exit flue at poking period, in order to reduce the amount of fly-ash. The wares are tightly packed and 30 minutes of soaking time was allowed. Two set of cones were used. At the top cones 8, and 9 were placed, while used cones 8 and 9 were put at the lower shelves. Hamer (1975) however, does not encourage the reuse of cone that were not fused in the previous firings. he says such cones might have been subjected to an amount of heat work which made them inaccurate. The firing continued until the cone fused and lasted for 5 hours which was 30 minutes less than the second firing. Fig. 5.8 The grates are pulled out of the fireboxes, if not, they would be oxidized and become warped.

5.5.1 RESULT:

The third firing was quicker and it reached the temperature required, but one of the bagwalls fell and caused irregular heating. The kiln was allowed to cool down gradually for 5 hours. There were improvement both in the firing and the firing time.



Fig. 5.8 Third Glaze Firing Result



Fig. 5.9 Finished Glaze Wares

5.6 ADVANTAGES OF WOOD FIRING:

1. Wood is available in abundance.
2. With wood firing a potter does not need to rely on man-made energy - gas, gasoline and electricity.
3. Wood kiln conserves heat better and is more suitable for reduction firing.
4. The kiln could be adjusted structurally to use gas and gasoline burners.
5. Sulphur-dioxide is a problem with kinds of fuel e.g. coke, and coal, but with wood it is a negligible factor.
6. Nitrous oxides are not a real problem with wood due to the relative low temperature of wood combustion.
7. Presently and with regard to the cost of fuel, wood is relatively cheaper and available.
8. It reduced costs of production as actual firing capability of a cord of wood will cost about ₦400.00 or less to fire twice, whereas one gas cylinder (50kg) will cost about ₦800 - ₦1,000.00.
9. high temperatures are also possible with wood, if properly managed and can fire cone 16. According to Igwilo (1982) Japanese high temperature stone-ware and porcelain are still fired in wood kiln and in salt-glazed stoneware in Germany.

5.7 DISADVANTAGES OF WOOD FIRING:

1. Wood firing demands all the fireman's time because any distraction could cause a disaster for the firing.
2. Flames need time to develop within the confine of the fireboxes.
3. Wood is bulky and requires large storage areas.
4. Heavy resinous bark often clogs up ash pits in the early stage of firing which causes slogging in the flues.
5. Wood produces enormous amount of smoke.

5.8 OBSERVATIONS:

The cost of materials in the market is not stable because prices fluctuate. Distance from the source of supply will also affect the prices of materials. Based on findings the following conclusions are drawn:

1. Olsen (1983) confirms that soft wood is best, for firing a wood burning kiln because it has less density or weight in pounds per cubic foot, and thus burns more readily e.g. Egun or Afara.

2. According to **Igwilo (1983)** wood should be allowed to dry for at least six months before using them as fuel in a kiln. Wood with an excessive amount of moisture will cause steam to form, creating a cooling effect which will nullify heat release.

3. The kiln can be used in all Post Primary\Higher Institutions because of avaliability of raw materials e.g. wood and kaolin.

4. The kiln can be fired to $1300^{0}C$ and above, but for the kiln to last longer, the operational temperature recommended is $1280^{0}C$.

5. Wood firing can be dirty, producing smoke, flames, mess of wood cuttings, and these must be taken into consideration when choosing the site for the kiln, because of contamination/air pollution.

6. There are many misconceptions in pottery. One of them is that extremely fast firing is bad for pottery, glazes, furniture and so on. However, this misconception has been debunked as a result of the researcher's findings.

7. Another misconception is that wood kilns usually take longer time to fire to cone 9. However, if the kiln is properly pre-heated there will be no damage to wares, except the differences caused by the fly-ash flashes on the bodies or glazes.

8. Some students of (Ila-Orangun College of Education) were optimistic in establishing ceramic studios as a result of good performances of the kiln. They therefore felt that importation of gas or electric kilns would not be necessary.

5.9 RECOMMENDATIONS:

The following recommendations are made for further study:

1. That further studies be conducted on the abundance of ceramics raw materials in Nigeria.

2. Researchers should be encouraged to conduct further studies on wood firing kiln.

3. That further research be conducted on why pottery is not being given proper attention in secondary schools.

5.10 CONCLUSION

Benjo (1982) points out that more often than not, people tend to believe that the introduction of ceramic art in the curricular of our schools and institutions of higher learning would constitute extra problems. This could involve the problem of imported raw material and machinery for production. Such a concept is uncalled for. It is, therefore, the researcher's view that the availability of the basic raw materials for ceramic products can attain perfection and durability through wood firing.

BIBLIOGRAPHY

1. Ahuwan, Abbas (1987) "The importance of ceramics in National Development. The Nigerian Experience": A lecture delivered on the occasion of the annual conference of Ceramic Association of Nigeria - Zaria.

2. Cardew, M. (1969) Pioneer Potter: Longman Group Limited, London New Impression.

3. Cooper, E. (1972) A History of Pottery: Longman Group Limited, London.

4. Counts, C. (1973) Pottery Workshop: McMillan Publication Co. Inc. New York.

5. Ewule J.O. (1988) Development of Model Gas Kiln for Ceramics Production from Local Raw Materials: A Master Degree Thesis, industrial Design A.B.U. Zaria.

6. Gilchrist J.D. (1963) Fuel and Refractories: Pergamon Press, Oxford, London. volume I

7. Gukas, H. (1985) "A Feasibility Study of Formulating some Porcelain Bodies from Local Raw Material in Kaduna State": A Master Degree Thesis. A.B.U. Zaria.

8. Hamer, F. (1975) The Potters Dictionary of Materials Techniques: Pitman Publishing.

9. Hamilton, P. (1976) Pottery and Ceramics: The Thermas and Hudson Limited, London.

10. Haroldm, P. (1976) Pottery, Handwork of Clay, Glaze and Colour: Bland for Press, London, W.C.I

11. Hofsted, J. (1976) Pottery, A complete Introduction to The Art Craft of Pottery: - London.

12. Gregory, I. (1977) Kiln Building: Second Edition, Adom & Chares Black - London.

13. Johnstone, S.J. and Johnstone, M.C. (1961) Minerals for the Chemical and Allied Industries: Camoman and Hall, London.

14. Leach, B. (1976) A Potter's Book: Great Britain Faber and Faber 15th Impression.

15. McMeekin Ivan (1967) Notes for the Potters in Australia, Raw Material and Clay Bodies: South Wales University Press Limited, Sydney.

16. Nash, W.C. (1976) Brick Work: Hutchinson & Co. Limited, London.

17. Nelson, Glen (1971) Ceramics: A Potter's Handbook Holt, Rinehart and Winston.

18. Nicholas, P.C. (1980) Wood for Energy: Published by Ann Archor Science Publishers, Inc, Michigan, U.S.A.

19. Niser, M.L. (1980) Wood Energy: Published by Ann Arbot Science Publishers, Inc, Michigan, U.S.A.

20. Okoruwa Pedro (1986) "The Utilization of some selected Raw Materials for Porcelain slip Casting and Glazing of Moulded Ceramics": Unpublished M.A. Thesis, A.B.U. Zaria

21. Olsen F.L. (1983) The Kiln Book: Published by Chilton Company, U.S.A.

22. Paul Soldner (1966) Kiln Construction: American Craftsmen Council, New York.

23. Rhodes, D. (1968) Kilns: Chilton Book Company, Radnor Pennsylyvania.

24. Ritchel, W.R. (1975) Gas Kiln Firing: Keramos Books, Bassett, California.

25. Roger, Sylvia & John (1975) Building Pottery Equipment: Awtson - Guptill Publications/New York, Pitman Publishing - London.

26. Singer, F. & Singer, S.S. (1963) Industrial Ceramic: Chapman and Hall Limited, London.

27. Tillman, D.A. (1958) Wood As An Energy Resources: United Kingdom Edition Published by Academic Press, Inc. London.

28. Wren D. (1957) Pottery Making: Sir Isaac Pitman and Sons Limited, London.

JOURNALS

1. Alexander, W.C. (1976) Wood Firing Pottery: Quarterly Vol. 12 No. 45 (1976) pp. 12 - 18.

2. Benjo, N.I. (1982) Firing a Wood-Burning Kiln - Its Economic Value in Ceramic Art: Nigeria Magazine No. 140 pp. 11 - 28.

3. Franz, K.F. (1970) The Teaching of Pottery: Nigeria Magazine No. 140, (1982) pp. 11 - 23.

4. Igwilo, B.N. (1983) Traditional Pottery: Nigeria Magazine No. 147 pp. 35 - 36.

5. John, P. (1975) Building and Firing a Wood Burning Kiln: Ceramic Monthly Vol. 27, No. 7 pp 34 - 37.

6. Larry, L. (1979) Building and Firing and Alfred Wood Kiln: Ceramic Review Vol. 27 No. 9 pp. 61 - 63.

7. Robberts, D. (1918) Nigeria Pottery: Transaction, British Ceramic Society.

COST OF MATERIALS

S/No.	Items	Qty.	Unit Price	Total ₦ . K
1.	Standard Brick (24 x 7. 5 x 12)cm	1250	7.50	9,375.00
2.	Arch Brick (12 x 7 x 6 x 12)cm	300	7.50	2,250.00
3.	Low-duty Brick (24 x 7.5 x 12)cm	750	7.50	5,625.00
4.	Standard Feather-edge Brick (24x13x12x7)cm	40	20.00	800.00
5.	Angle Iron - 4cmx60cm	4	300.00	1,200.00
6.	Plywood 0.6cm	1	360.00	360.00
7.	Cement	3	250.00	750.00
8.	Gravel Stone	1/2 Tipper	180.00	180.00
9.	Saw Dust		400.00	400.00
10.	Firewood and Bamboo		460.00	460.00
11.	Transportation (Lump Sum)			2,700.00
12.	Miscellaneous			750.00
	T O T A L			₦24,850.00

STANDARD BRICK SIZES

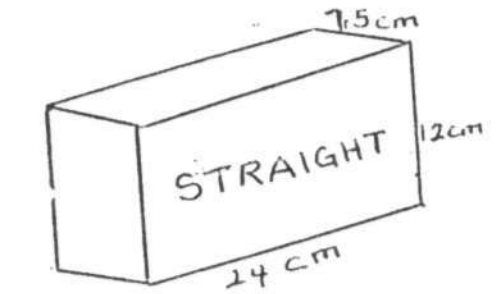

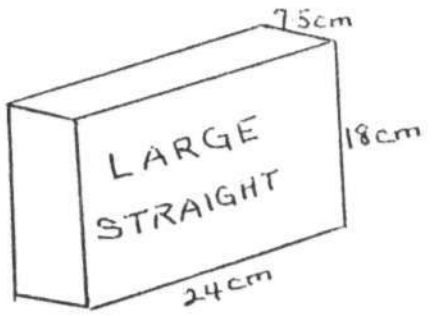

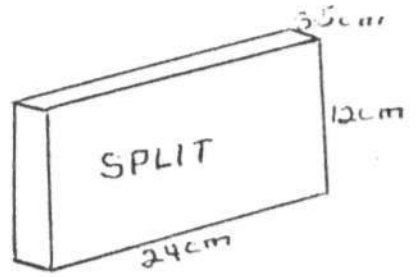

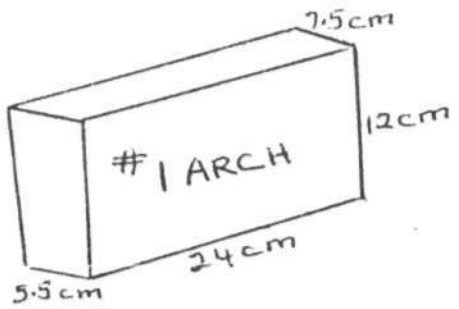

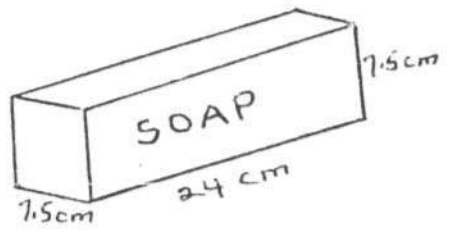

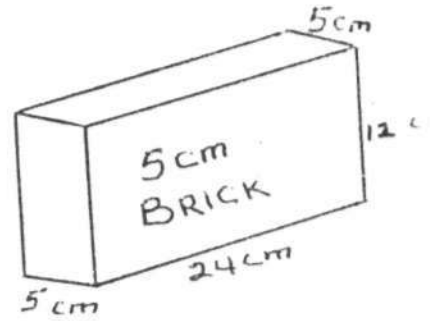

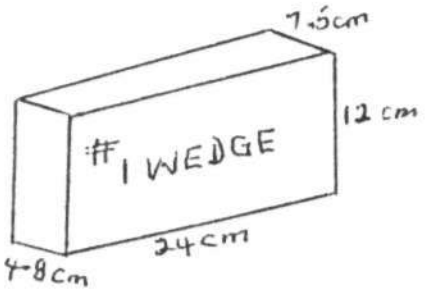

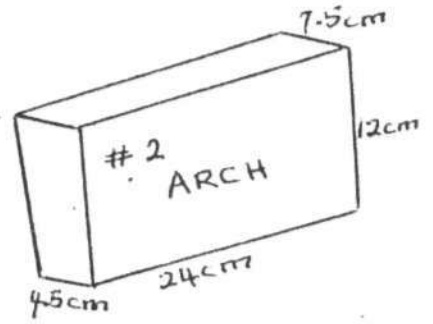

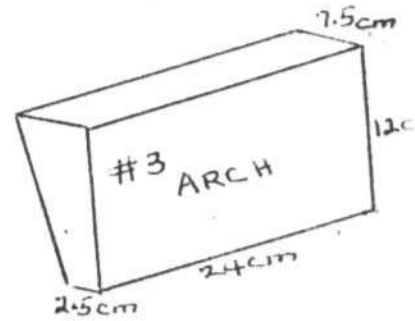

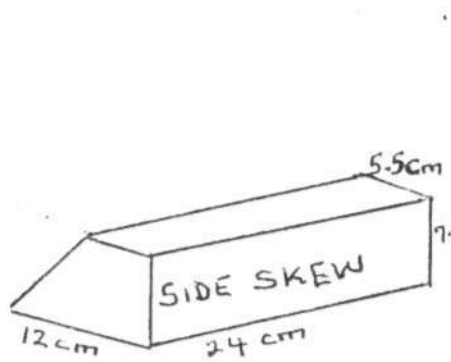

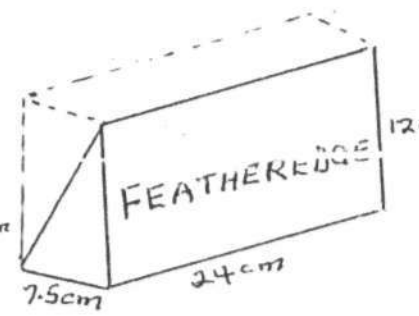

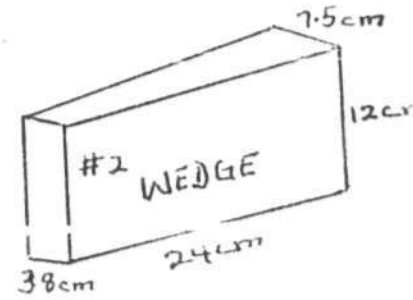

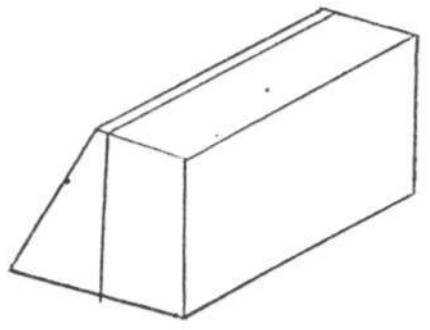

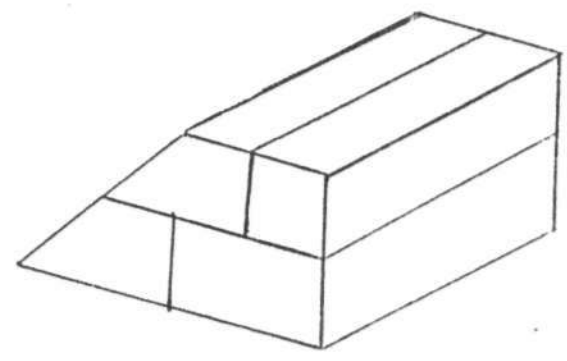

For 12cm Arch Rise = 4cm Per Foot of Span Use One Feather-edge 24cm x 12cm (7cm - 1cm).

For 12cm Arch Rise = 6cm per Foot of Span use two Side Skew; 24cm x 12cm x 7cm and One Soap brick 24cm x 7cm x 6cm.

SOME OF TOOLS USED DURING KILN CONSTRUCTION

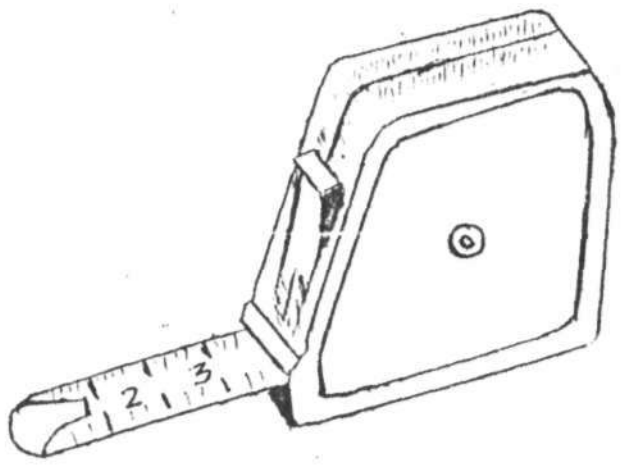

PUSH-PULL STEEL TAPE

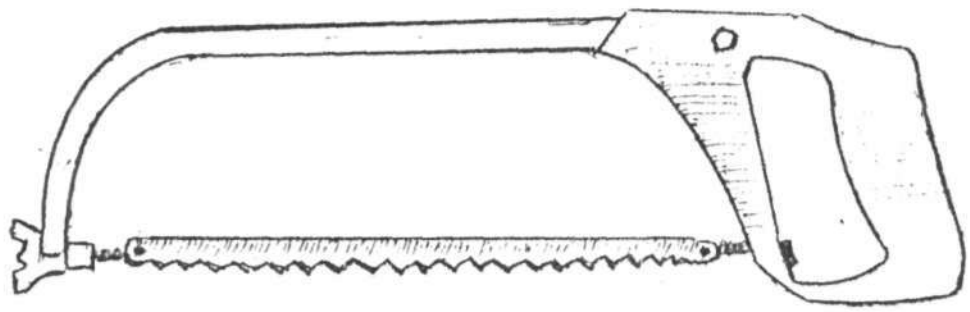

HACK SAW

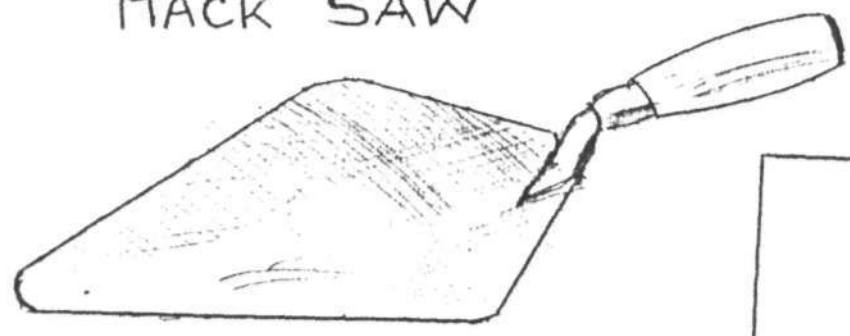

BRICK TROWEL



SPANNER

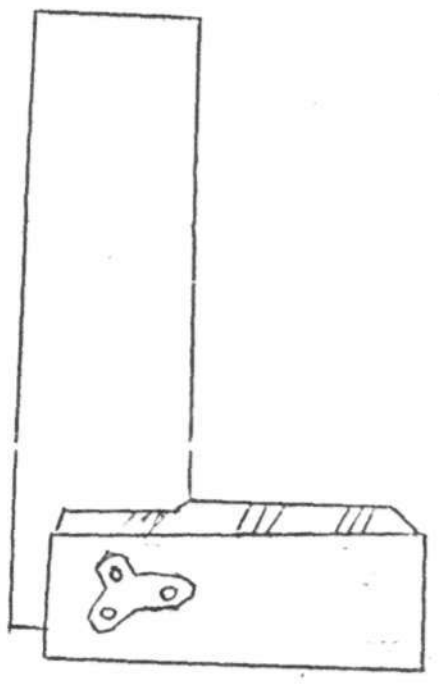

L-SHAPED SQUARE

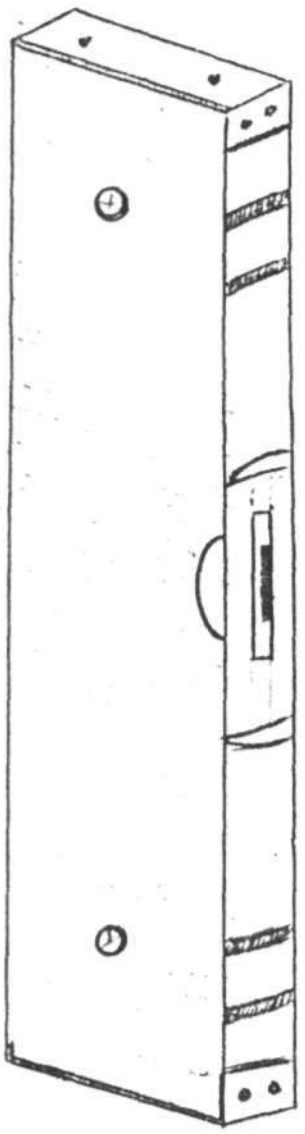

SPIRIT- LEVEL

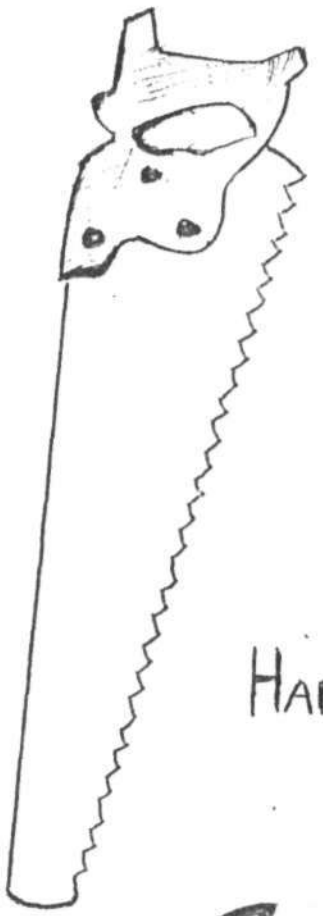

HAND SAW

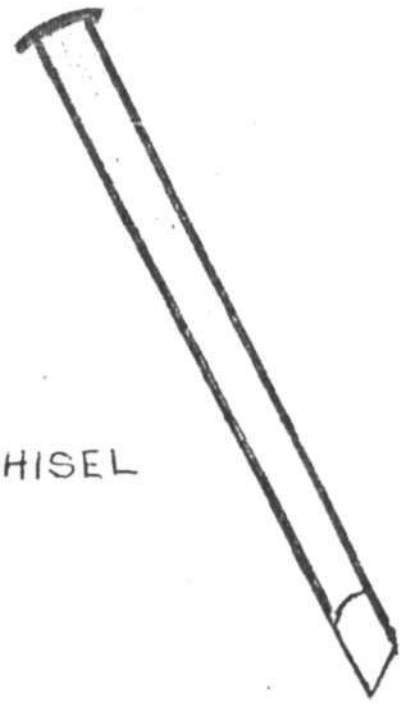

CHISEL

METHODS OF ARRANGING SHELVES AND PROPS

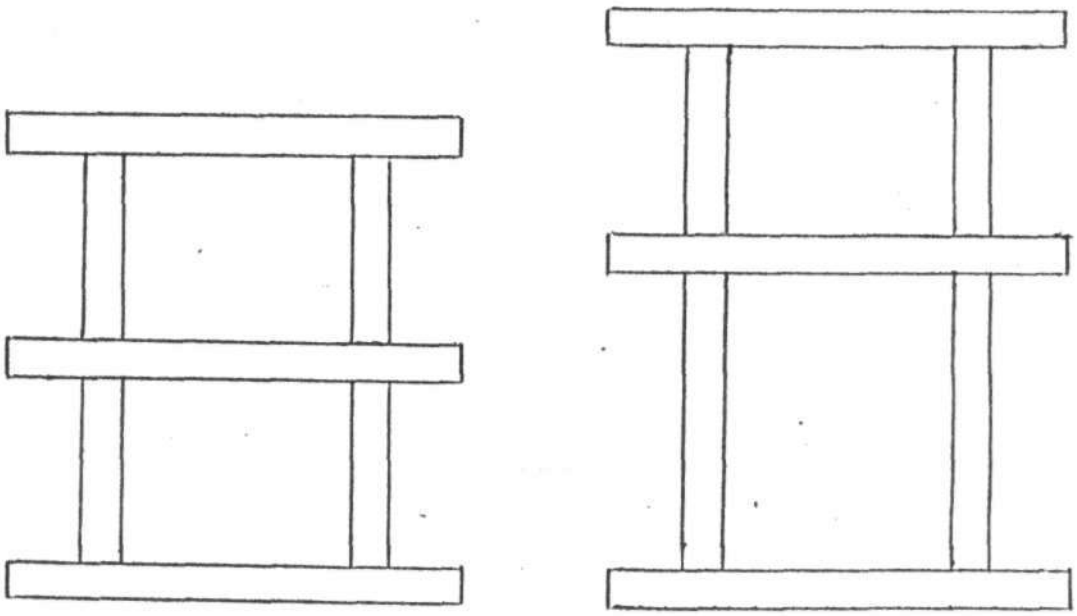

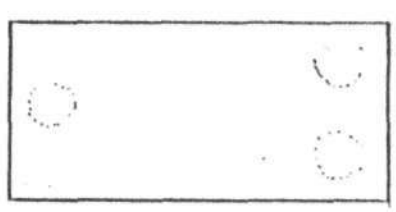

Fig. 5.1

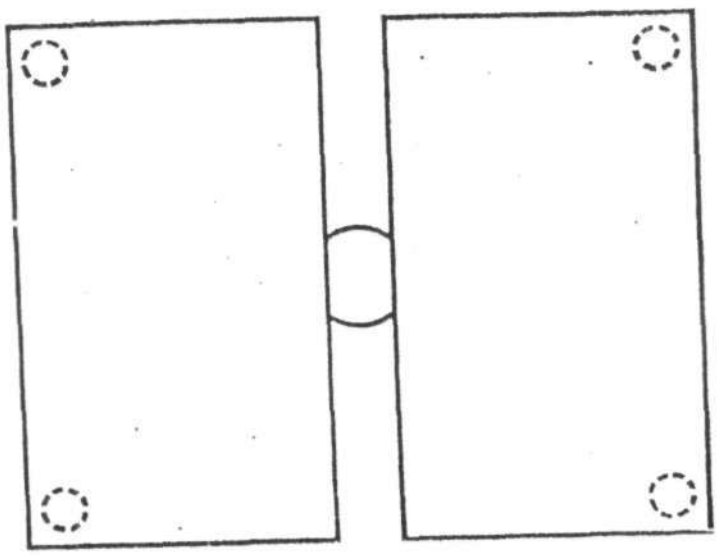

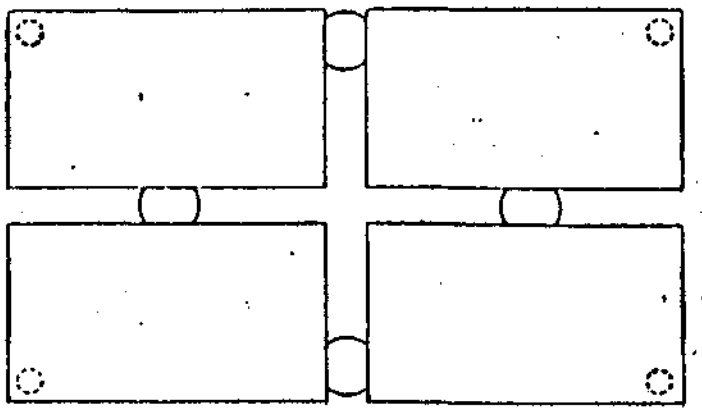

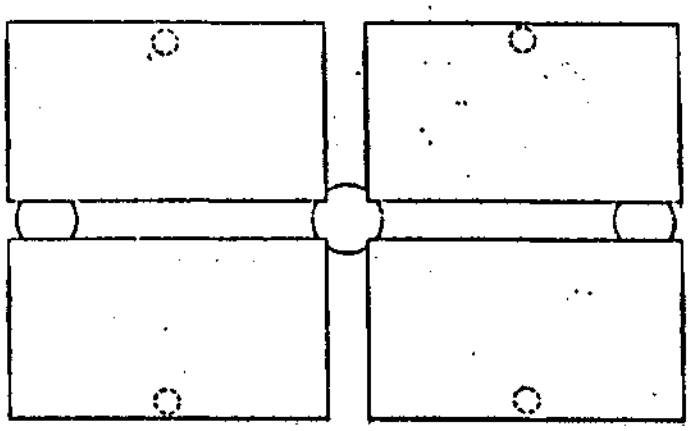

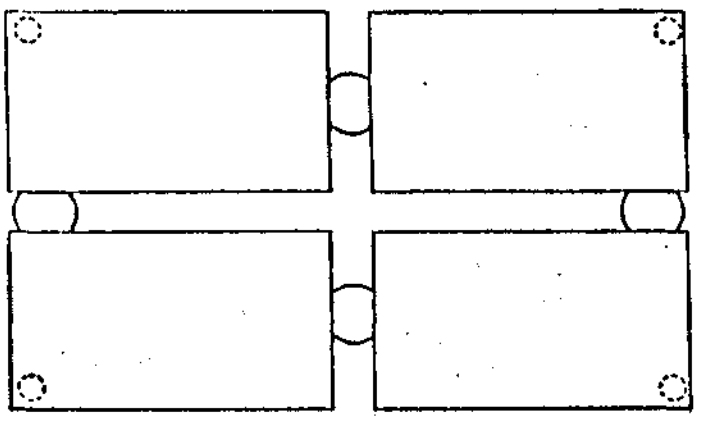

PLAN OF WOOD FIRING DOWNDRAFT KILN

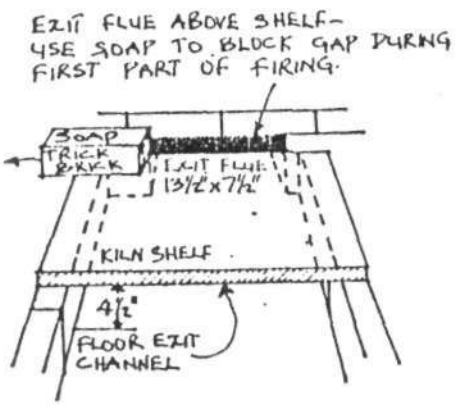

Fig. 5.2
Shelf and exit flue details.

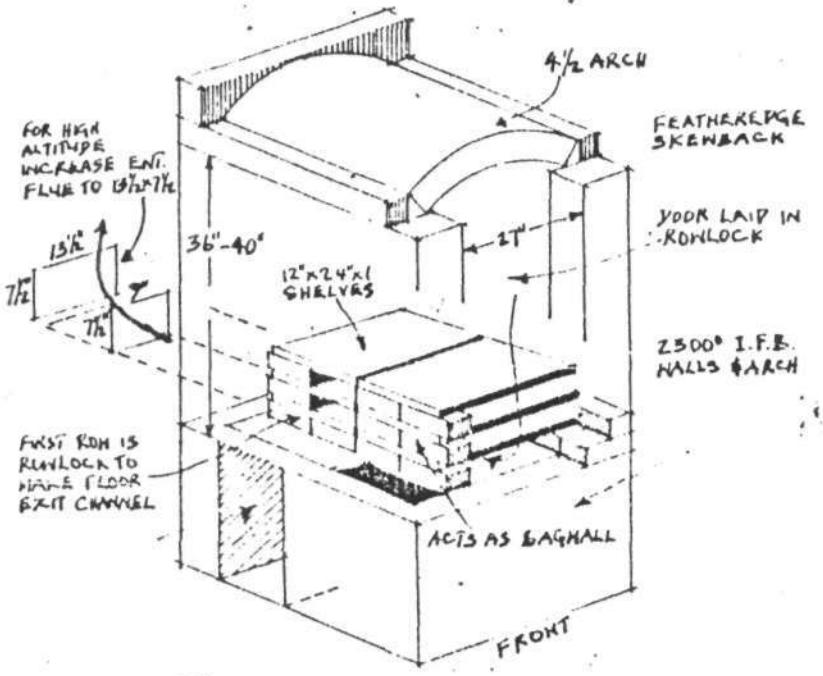

Fig. 5.3 Downdraft kiln - Wood.