A SURVEY OF CONCRETE PRACTICE ON SELECTED CONSTRUCTION SITES IN NIGERIA

BY

AIYETAN, AYODEJI OLATUNJI

A THESIS SUBMITTED TO THE POSTGRADUATE SCHOOL
AHMADU BELLO UNIVERSITY, ZARIA IN PARTIAL FULFILLMENT
OF THE REQUIREMENTS FOR THE AWARD OF THE MASTER OF SCIENCE
(M.SC) DEGREE IN CONSTRUCTION MANAGEMENT

AUGUST, 1997

DECLARATION

I, Aiyetan, A. Olatunji of the Department of Building, Faculty of Environmental Design, Ahmadu Bello University, Zaria hereby declare that this research work has been an academic undertaking and a personal effort in pursuit of knowledge.

All quotations and information utilised and their sources have been duly acknowledged by means of reference.



Aiyetan, A. Olatunji

DEDICATION

To my Family and Parents.

CERTIFICATION

This thesis entitled A SURVEY OF CONCRETE PRACTICE ON SELECTED CONSTRUCTION SITES IN NIGERIA - by Olatunji, A. Aiyetan meets the regulations governing the award of the degree of M.SC IN CONSTRUCTION MANAGEMENT of Ahmadu Bello University, Zaria and is approved for its contribution to knowledge and literary presentation.

O.W.D. ORADOFIN
CHAIRMAN,
SUPERVISORY COMMITTEE

Date: 8-10-97

DR.O.G. OKOLI
MEMBER,
SUPERVISORY COMMITTEE

Date: 9-10-97

Z.J. SIKORA
HEAD OF DEPARTMENT

Date: 10.12.1997

PROF.J.U. OLAYEMI
DEAN OF POSTGRADUATE SCHOOL

Date: 26/5/98

ACKNOWLEDGEMENT

I wish to express my sincere gratitude to Mr. O.W.O Obadofin chairman, supervisory committee for accepting to supervise this thesis, his intellectual guidance and also a source of encouragement in the pursuance of this work. My thanks also goes to Dr.O.G. Okoli, Member, Supervisory Committee on this work for his constructive criticism, profound help and encouragement.

I express my gratitude to Professor T.O. Mosaku for his effort on this work.

I also thank other members of staff who have contributed in one way or the other to this thesis. I hereby acknowledge the efforts of sister Shade during the course of this research.

ABSTRACT

A survey of concrete practice on selected construction sites in Nigeria has been undertaken. It was aimed at establishing whether or not good concrete practice is being followed. Fifteen sites were Investigated to review the following— storage of dry materials, transportation modes, mix design and mixing practice of concrete and the background training of the operatives.

The following results were obtained:

The storage facilities on sites are poor as compared to claims in questionnaires, the use of traditional method of transportation of materials was observed on the sites contrary to claims in the questionnaires, no standard method of measurement for materials in the production of concrete was observed and operatives were found to have no background training before they are put to work.

The experiment carried out on concrete samples taken from sites showed a general low strength. This correlates with the finding of the study.

TABLE OF CONTENTS

	Page
Chapter	ii
Declaration	iii
Dedication	iv
Certification	v
Acknowledgement	vi
Abstracts	vii
Table of Contents	ix
List of Tables	xi
List of Figures	xii
List of Appendices	1
INTRODUCTION	1
1.1 Background	4
1.2 Aim and Objectiv	5
1.3 Methodology	6
1.4 Scope and Limita	6
1.5 Assumptions	7
2. BASIC PRINCIPLES	7
2.1 Physical Characte	7
2.1.1 Cement	9
2.1.2 Aggregate	10
2.1.3 Water	10
2.1.4 Admixtures	11
2.2 Material Storage	11
2.2.1 Site Layout (Genera	11
Storage of Cement	

Storage of Aggregate ---------- 13
Storage of Water ---------- 13
2.3 Essential Properties Of Materials For Good concrete- 14
2.3.1 Materials ---------- 14
Properties of Cement ---------- 14
Properties of aggregate ---------- 14
Properties of Water ---------- 15
2.3.2 Good concrete Production practice ---------- 15
Mixing proportion ---------- 15
Mixing ---------- 15
Mixing time ---------- 16
Mixing Platform ---------- 17
2.4 Concrete Production ---------- 17
2.4.1 Mix Design ----------17
Water-Cement (W-C) ratio ---------- 17
Aggregate-Cement ratio ---------- 18
Sieving ---------- 20
Principles of Mixing ---------- 20
Overmixing of Concrete ---------- 21
2.4.2 Fquipment For Transportation Of Loose Materials -- 22
Headpans/WheelBarrows ---------- 22
Dumper ---------- 22
Shovels,Forklift And Faceshovels ---------- 22
Bucket For Water And Rubber Hoist ---------- 25
2.5 Properties Of Good Concrete Mix ---------- 25
2.5.1 Workability ---------- 25

2.5.2 Factors Affecting Workability ---------- 26
2.5.3 Bleeding ---------- 27
2.5.4 Segregation ---------- 28
2.5.5 Causes Of Segregation ---------- 29
2.5.6 Retempering ---------- 29
2.5.7 Agitation Of Concrete ---------- 30
2.5.8 Compaction of Concrete ---------- 30
2.5.9 Curing Of concrete ---------- 31
2.5.10 Contamination Of Loose Materials Of Concrete ------- 32
Contamination Through The Use Of Hand Shovels, Fork-
Lift And Face Shovel ---------- 32
Contamination Through The Use Of Dumper ---------- 34
2.6 Transportation of Newly Prepared Concrete ---------- 34
2.6.1 Equipment And Plant For Transportation Of Newly
Prepared Concrete ---------- 35
Concrete Pumping Machine ---------- 35
Fork-Lift Truck ---------- 35
Mono-Rail ---------- 37
Cranes ---------- 38
Belt Conveyors ---------- 39
Concrete Mixers ---------- 39
Transportation of concrete By Wheel Barrow/Headpans - 39
Dumpers ---------- 39
2.7 Properties Of Hardened Concrete ---------- 41
2.7.1 Compressive Strength ---------- 41
2.7.2 Density ---------- 41

2.7.3 Permeability ---------- 42
2.7.4 Durability ---------- 42
2.7.5 Tensile Strength ---------- 42
2.8 Quality and Staff Training Techniques ---------- 43
2.8.1 What Constitute Quality ---------- 43
2.8.2 Personnel requiring training ---------- 46
Top Management And Quality ---------- 46
Middle Management ---------- 47
Technicians And Technical Assistant ---------- 47
Tradesmen And Artisans ---------- 47
2.8.3 Training Avenues ---------- 48
The Formal ---------- 48
The Informal ---------- 48
3. SITE INVFSTIGATION ---------- 49
3.1 Preamble ---------- 49
3.2 Researchers Observation On Selected Sites ---------- 51
3.2.1 Properties Of Materials On Sites ---------- 51
Cement ---------- 51
Aggregate ---------- 51
Water ---------- 52
3.2.2 Storage Of Materials On Sites ---------- 52
Storage Of Cement On Sites ---------- 52
Storage of Aggregate On Sites ---------- 52
Water Storage ---------- 53
3.2.3 Transportation Of Concrete On Sites ---------- 53
3.2.4 Batching ---------- 54

3.2.5 Transportation Mode Of Concrete On Sites ---------- 55

3.2.6 Placement And Compaction Of Concrete ---------- 55

3.2.7 Training ---------- 56

3.3 Data From Questionnaire ---------- 56

3.4 Sampling Of Site Concrete ---------- 64

3.4.1 Testing ---------- 64

4. DISCUSSION ---------- 67

4.1 Preamble ---------- 67

4.1.2 Properties Of Materials On site ---------- 67

Cement ---------- 68

Aggregate ---------- 68

Fine Aggregate ---------- 68

Water ---------- 69

4.2 Storage Of Materials On Sites ---------- 69

4.2.1 Cement Storage On Sites ---------- 69

4.2.2 Storage Of Aggregate On Sites ---------- 70

4.2.3 Water In Storage ---------- 71

4.3 Production Of concrete On sites ---------- 71

4.4 Placement Of concrete On Sites ---------- 73

4.5 Quality Of Concrete On Sites ---------- 74

4.6 Training Of Staff On Sites ---------- 74

4.7 Supervision ---------- 75

4.8 Analysis Of Data From Questionnaire ---------- 76

4.9 Consequences Of Mal-Handling Materials For Concrete

And Concrete ---------- 87

4.9.1 Leads To Sources Of Weak Zones ---------- 87

4.9.2 Time Loss And Delays ---------- 88

4.9.3 Material Loss And Increase In Project Cost ---------- 88

4.9.4 Social Problem ---------- 88

5.0 SUMMARY, CONCLUSION AND RECOMMENDATION ---------- 89

5.1 Summary ---------- 89

5.2 Conclusion ---------- 89

5.3 Recommendation ---------- 91

References ---------- 94

Bibliography ---------- 97

Appendix

LIST OF TABLES

Table	Title	Page
2.1	Time Limit for Concrete Mixing	16
2.2	Variation of Aggregate Size After Five Minutes of Mixing	16
2.3	The Ideal Gradation of Sand for Concrete	27
2.4	Comprehensive Strength of Concrete	41
3.1	Names of Construction Sites Visited	50
3.2	Qualification of Site Representatives	56
3.3	Whether Company Have Concrete/Masonry Foremen	56
3.4	Whether Materials Received on Site Contains Impurities	57
3.5	Improving Quality of Materials Received	57
3.6	Physical Appearance of Concrete	58
3.7	Mode of Aggregate Storage	58
3.8	Type of Package to Cement	58
3.9	Storage of Cement	59
3.10	Average Number of Torn Cement Bags	59
3.11	Maintenance of Quality of Torn Cement Bags	59
3.12	Number of Cement Placed One on Another During Storage	60
3.13	Order of Usage of Cement in Storage	60
3.14	Usage of Silos	60
3.15	Whether or Not Company Send Staff for Training	60

3.16 The Type of Training Company Send Staff For and Those Who Do Not ---------- 60

3.17 Whether There is on Site Training on Concrete for Workers ---------- 61

3.18 Method of Transportation of Concrete on Site - 61

3.19 Issue of Providing Covering to Sand and Gravel While Being Transported to Site ------- 61

3.20 Kind of route Concrete is Transported -------- 61

3.21 Whether Column of Normal Height (2.1-3m) are Casted Once or Twice ---------- 62

3.22 Whether or Not Heap of Concrete are Made While Casting Slab ---------- 62

3.23 Observation of Bleeding After Casting of Concrete (normal slab) ---------- 62

3.24 Whether Company Do Retemper Concrete While Casting ---------- 62

3.25 Observation of Honey Combing After Striking Off Formwork to Columns and Slab ---------- 63

3.26 Mostly Used Equipment for Compaction --------- 63

3.27 Average Comprehensive Strength of Site Concrete Produced at 7, 14 and 28 Days and Standard Specified ---------- 65

4.1 Average Compressive Strength Of Site Concrete-- 74

4.2 Steps For Good Quality Concrete ---------- 86

5.1 Average Compressive Strength For Site A And B Concrete Cubees ---------- 91

LIST OF FIGURES

Figure	Title	Page
2.1	Raised Timber Ground Floor ----------	12
2.2	Curve of Effect of Water-Cement Ratio on Compressive strength ----------	18
2.3	Road Note No. 4 Type Grading Curve For Size 19.05mm Aggregate----------	19
2.4	MCIntosh and Erntroys Type Grading Curves For Size 9.52mm Aggregate----------	19
2.5	Headpan and Wheel Barrow ----------	23
2.6	Hand Shovel, Face Shovel/Fork Lift Truck ----	24
2.7	Influence of Moist Curing on the Strength of Concrete With A Water-Cement Ratio of 0.50 --	33
2.8	Truck Mounted Concrete Pump ----------	36
2.9	Mobile Concrete Pump Fitted With Booms-------	36
2.10	Mono-Rail Transporter----------	38
2.11	Concrete mixers ----------	40
3.1	Compressive Strength Curve For Site Concrete Cubes Compared With The Standard.----------	66

LIST OF APPENDICES

Appendix	Title
1	Report From Tell Magazine of June 3
2	Report From Daily Time of Jan. 29 1992
3	Particle Shape Classification for Sand
4	Result of Site A and B Cube Strength
5	Questionnaire

Chapter 1

INTRODUCTION

1.1 Background To The Study

Concrete is a widely used composite construction material consisting basically of three important components - cement, fine aggregate and coarse aggregate. Water is used at the production stage to facilitate the hydration of the cement content which binds the aggregates together into a hard strong mass.

The strength of a concrete lives with it throughout the life span of the buildings in which it is used and there could be grave consequences if the strength is inadequate. The strength of a concrete structure is derived from the quality of the concrete utilised and the degree of adherence to good practice as it relates to mix design. There are many factors that combine to determine the quality of concrete. These include the physical characteristics (properties) of individual materials at input, (that is, its strength and state at use), attitude towards work or the consciousness towards quality achievement, and the type of equipment and tools used in the process of production. The quality of concrete is also directly related to the quality of materials used to make it and the manner in which the materials are handled. Once there is deficiency in one or more of the above mentioned criteria for good quality concrete of the structural members, it results in the collapse of part or the entire building structure.

Gbadebo (1992, p.26) reported an investigation carried out in Lagos and Port Harcourt of reasons for collapse of buildings in these areas stating that "13% of the failures of building structures investigated are as a result of the use of poor quality materials by most Nigerian Medium Size Construction Companies". Alele (1993, Pp.37-39; 57) classified a medium size construction company as "one with 8-23 permanent employees or with a turn over of about ₦75 million". Majority of construction companies in this country fall into this class. As a result of the occurrences of collapse in buildings which lead to loss of life, waste of materials, additional cost incurement and time loss. Individuals had been so aggravated to the point of spelling out measures to be met on individuals responsible to sites in which buildings collapse. One of such measures was suggested by Remi (1995, P.TP1) who states punitive measures for those in construction in which buildings collapse as a result of the bad handling of materials (see appendix-I).

Owoyale (1990, pp. 156-165) observed that "Failures could result from the structure". Failure could also take place as well from the other constituents of concrete. This research work seeks to investigate failures that could result from the concrete as a member of the structural system and to propose approach to tackling the occurrence of failure.

Though the preliminary examination conducted at the onset of

this research at various construction sites shows a lack of good handling approach to concreting, it is surprising that no serious investigation has been done before now, to show reasons for collapse of buildings.

From Newspaper reports and observed incidence of collapse of buildings, there is a growing evidence that handling of constituent materials and the mixed concrete before placing may be responsible for some of these occurrences.

According to Murdock and Brook (1979, p.107) "Materials for concrete are handled and subsequently mixed together to give certain requirements of a concrete mix, these include compressive strength, workability, durability and good cohesion" It is certain that when this requirements are not adequate, failure may occur.

Handling is defined by P.C.A. (1975, P.111) as "all processes involved in the increasing of the likelihood of good performance of the constituents". This definition of handling implies that bad handling of materials could lead to poor performance. Therefore handling is essential to the attainment of good quality concrete.

Johnston (1981, P.28) believes that "the sequence of materials handling involves four separate activities - lifting, transportation (movement) both horizontal and vertical, storage and placement". Whether or not handling is limited to just these four

activities, certainly each of them could be very crucial and bad handling at any stage results in grave consequences.

Collapse of buildings as revealed in appendix II, shows the degree of competence in handling concrete and its constituent materials by workers in some firms in the Nigerian construction industry. Collapse of buildings brings about loss of lives, wastage of materials and time loss.

The concern to research into the handling of concrete and its constituent materials arose in the light of the grave consequences of malhandling of concrete and its constituent materials in order to propose better approach of handling. When this approach are followed the collapse of buildings can be avoided or if possible completely eradicated. These failures inadvertently lead to loss of lives, materials and the time spent on the structure before collapse. These are reasons why urgent steps must be taken to halt the occurrence of collapse of buildings.

1.2 Aim And Objectives Of The Study

The aim of this work is to study present methodology of concrete practice in use on construction sites, to suggest, correct and to improve on-site preparation of concrete and its constituent materials for good quality production.

The objectives of the work are:-

1. To assess on the site the mode of handling of materials

(including storage), concrete production and placement for the purpose of improving its standard.

2. To appraise the tools and equipment in use and training opportunity to suggest better method that will aid the achievement of high quality.

3. To highlight bad practice in concreting work and to suggest steps that will lead to good practice in concreting towards the achievement of high quality.

1.3 Methodology

In order to achieve the set objectives the following procedures were followed.

All in all fifteen sites were visited to observe the procedures being followed in the making of concrete. In this regard, storage facilities, the handling of dry materials, the mixing methods and placing were looked into. A check was placed on the experience of the people responsible for the making of concrete in these various sites. Questions were asked to obtain forehand information regarding the procedures being followed.

Samples of concrete mixes were taken from these sites for testing and results compared with standard. The results obtained from observation, sample test and questions were analyzed. Conclusion and recommendation were drawn from them.

1.4 Scope And Limitation

The scope of the study covers all stages of handling of constituent materials for concrete and fresh concrete on the site. It centres on the medium sized construction companies, particularly those with on-going projects in Kaduna, Kano, Zaria and Abuja. Therefore, results of the study was limited in application to only medium sized construction companies.

This is due to the fact that the data used may not be applicable to large companies which are likely to feature different characteristics with respect to the parameters studied.

1.5 Assumptions

This work is predicated on the basic assumption that the data provided by the companies are true and reflect the actual situations in the companies.

Chapter 2

2.0 BASIC PRINCIPLES FOR GOOD QUALITY CONCRETE

A lot of researches have been done to establish standards for good concrete, some of which had been compiled into codes of practice. It is against these standards that good concrete practice is measured. The state and characteristics of materials for concrete work tell a great deal about the inherent properties of both the materials themselves and the concrete that may be produced. Hence, the methods of identification of, and testing for these properties have been clearly stated in the various literatures, while the consequences for non-compliance are grave. Therefore, it is imperative that people that are engaged in concreting work should be familiar with and adhere to these standards to avoid these grave consequences.

2.1 Physical Characteristics Of Materials

Materials for making concrete are in various shapes and forms and need to be examined on their own.

2.1.1 Cement

Cement is the material that bonds aggregate and sand together after mixing. There are different types for use under varying conditions. There are some to resist weather conditions, some to produce early high strength and some to give even a distinct colour. Whatever the purpose, cement in its normal form is powdery. Atuanya (1974, P.8) states that "it should be fresh and of such finesse (powdered form) not less than 2500 centimetres square per

gram (cm^2/g)". This expresses its specific surface area. A few of the different type and their areas of use of cement available is enumerated below.

Ordinary Portland Cement - This is the basic portland cement used in everyday construction. It has a final setting time of not more than ten hours.

Rapid Hardening Portland Cement - The basic difference between the ordinary and rapid hardening cement is that the rapid hardening cement is finer in grains and attains greater strength at early age. Used where high early strength is required.

Portland Blast Furnace Cement - Containing one part of portland cement and between 0.5 to 2 parts of granulated basic blast slag. Used in marine construction and in large mass concrete work.

Low Heat Portland Cement - This is used in construction that requires large mass of concrete, where ordinary cement will develop much heat.

Other Cements include - Sulphate resisting portland cement, resist sulphate in water.
White portland cement, used for terrazzo

work and some other works requiring white finishing.

Waterproof cement, this is water repellant cement. Where water penetration may be detrimental to facility provided.

Coloured cement, this is normally ordinary portland cement meant to give a distinct colour to work.

2.1.2 Aggregates

Aggregates for concreting are of two types - fine aggregate and coarse aggregate. Fine aggregates referred to as sand are those that pass through 5mm British Standard sieve gauge.

For greater binding, the grains or particles of the sand should be irregular and angular in shape. This implies that, the particle shape and texture are of great importance. Neville (1973, P. 108) gives a table of particle shape classification for sand. This is attached to this work as appendix III.

Coarse aggregate refers to aggregates greater than 4.75mm British Standard sieve gauge sizes. Coarse aggregates are of similar quality and characteristic with fine aggregates.

2.1.3 Water

Water for concrete works is normally potable water for drinking. Water used in making concrete is obtained from rivers, streams and so forth. It is coloured in some cases or with high acidic content. It may be necessary to carry out tests to establish its purity before use.

2.1.4 Admixtures

Admixtures are materials other than water, sand, coarse aggregate and cement added as ingredient in concrete to achieve specific purposes.

They are usually in powder, liquid or solid forms. They are added to achieve greater strength, colour and so forth.

According to Maguire (1989, P. 123) "admixtures are liquids, powder or solids that are added to the constituents of concrete to alter the basic form or character of the product or complete its set of ingredients needed for the product". Frank (1982, P. 73) claims that "any substance added to the portland cement, water and aggregate for the purpose of giving the concrete particular properties is called an admixture".

Admixtures are used with respect to the type of construction work to be done. They are added to concrete to either change the physical composition for example the colour or the chemical composition of the compound form, to change the strength. Examples of admixtures are hardeners, damp-proofing and permeability

reducing agents, accelerating admixtures, among others.

2.2 Material Storage

2.2.1 Site Layout (General)

The laying out of site will have a far reaching implication on concrete practice. A good site layout in terms of location and placement will not only minimise wastage of time and materials. It will ensure high productivity and quality concrete. Therefore, attention must be paid to a well laid out site in respect to concrete practice.

Storage of Cement: Cement is supposed to be kept in good condition to maintain their quality. This is important since it is affected by weather condition. According to Patton (1976, P.98), Frank (1982, P.72) and Johnston (981, P.73) cement should be store in a weather proof environment (air tight area or moisture free condition) because of the ever-present water vapour in the atmosphere and the tendency for cement to harden in this condition, hence becoming useless.

Cement that will be stored for a very longtime should be covered with tarpaulin or polythene. Cement should be stored on a platform that is raised to create movement of dry air. A typical construction of cement store house is shown in figure 2.1 on the next page. A Sleeper or Dwarf wall constructed after the floor at 1.8m centres and on it we have wall plate and timber joists

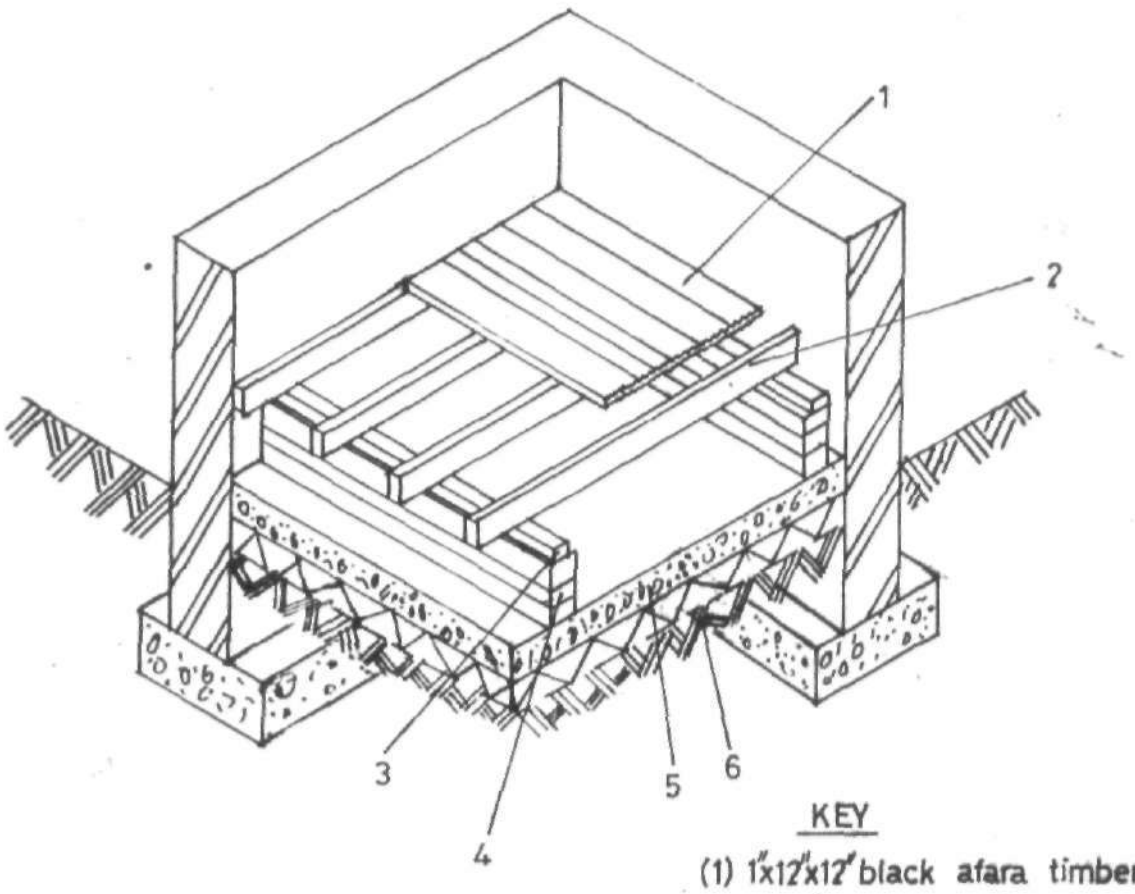

KEY

(1) 1"x12"x12' black afara timber plank

(2) 2"x5" black afara timber at 375mm to 450mm center

(3) 3"x6" black afara timber wall plate

(4) Honey comb sleeper wall at 1·8 center maximum with D.P.C. laid underneath

(5) 150mm thick concrate slab

(6) 150mm handcore

FIG. 2·1 Raised timber ground floor

SOURCE:- BARRY VOL. 1 (1979 P.62) Adapted

before the floor boards are laid. This is to ensure the flow of air and cause dryness within the store thus preventing dampness.
Silos is the best known method of storage of cement for construction work today, in that, cement stored in this way is not easily affected by weather conditions and other contaminants over a period of long storage.

Storage of Aggregates: Coarse and fine aggregates are stored under the same conditions on construction sites. Johnston (1981, P.69) states that "they should be in an open space where the ground had been prepared by the removal of top soil, levelled and finally laid with lean concrete (blinding), with a slight fall from the centre to ensure good surface and beneath drainage of water from the aggregate". Murdock and Brook (1979, P.50) also hold these same view. Taylor (1977, P.83) states that "bulk storage of aggregate should be on hard ground on a thin slab of weak concrete that is graded for drainage and dwarf walls should be placed between different materials".

For aggregates to be free from silt and spoil, weak concrete slab should be constructed on which they should be kept. In order that aggregate be free from flying debris and dust, after each working day, the aggregates should be covered with tarpaulin.

Storage of Water: Water is usually stored on site in either overhead or underground tank with supplies to mixing drum of concrete mixer through rubber hoist or bucket. For the

ground/underground tank, it becomes harmful to the concrete produced when the tank is not washed regularly as fungal materials begin to grow and the colour of the water becomes green. Murdock and Brook (1979, P.137) holds the view that "water for making concrete should be free from organic matter, silt and other salts".

2.3 Essential Properties Of Materials For Good Concrete

2.3.1 Materials

Arising from research works and practical experience, essential properties of loose materials for good concrete (cement, aggregate and water) had been identified as follows:

Properties of Cement: Cement to be used to make good concrete must be free from being lumpy or aggregated and should not be caked. If found in this form it indicates that the properties for making good concrete had been destroyed due to absorption of moisture during storage. Good cement for concrete is supposed to be in powdered form and of such fineness as reported by Atuanya (1974, P.8) 2500 centimetres square per gram (cm^2/g).

Properties of Aggregates: The essential properties of aggregates for good concrete as commented by P.C.A. (1975, P. 101) are:-

a. Coarse Aggregate: It should be hard and not the decomposed type of rock, free form mud, clay, salt and organic impurities like leaves, sugar cane chaff, groundnut shells, charcoal and reasonably dry. For greater bonding, it should be irregular and angular in shape.

b. Fine Aggregate: According to Murdock and Brook (1979, P. 124)

fine aggregates should be "sharp sand, free of mud, silt, clay and charcoal and not the soft type, also free of alkaline substances".

c. Properties of Water: The type of water to be used for good concrete is the potable water. According to Murdock and Brook (1979, P.137) it should be free from algae, odour, silt, organic acid, alkalis, salts and colourless.

2.3.2 Good Concrete Production Practice

a. Mix Proportion: The mix ratio for a particular concrete should be correctly observed. This is in terms of quantities. The exact quantities should be measured out for mixing. Incorrect measurement would affect the strength of the concrete produced of the supposed mix ratio.

b. Mixing: There are principally two methods of mixing. Mechanical and manual. The best method of mixing however, is the mechanical mix which allows for uniformity in mixing.

During the process of lifting materials from storage to point of mixing, they are prone to contamination. The material that is worst affected is the aggregate particularly during the use of hand shovel to lift aggregate (fine and coarse) directly stored on bare ground and earth is lifted along. Therefore care should be taken to remove loose materials from storage to avoid their contamination. Furthermore care should be taken when storing these materials to prevent or minimise their contamination. For example the provision of lean concrete base where possible.

c. Mixing Time: Mixing time should be adhered to in-order to avoid grinding of coarse aggregates thereby creating excess fine aggregate in machine mixing. It is highly impracticable in manual mixing. Murdock and Brook (1979,p.143) give the time limit for revolution per capacity of mixer. This is shown in the table below.

Table 2.1: Time Limit for Concrete Mixing

Capacity (m^3)	Time of mixing (minutes)
2 or less	1½
2.5	2
3.0	2½
5.0	3

Source: Murdock and Brook (1979, p.143)

The variation in aggregate sizes after five minutes of mixing is also given below

Table 2.2: Variations In Aggregate Size After Five Minutes Of Mixing

Percentage of size Group			% of Total Aggregate	
Size Group	Decrease after mixing	Increase after mixings	Decrease after mixing	Increase after mix.
1½" to 3/4"	3.5		0.7	
3/4" to 3/8"	15.0		3.1	
3/8" to No.4"		6		1.2
" 8		13		0.9
" 16		7.3		0.5
" 30		7.3		0.5
" 50	14.7		1.0	
" 100		4.5		0.4
" 100		41.0		1.4

Source: PCA (1975, p.282)

c Mixing Platform: A mixing platform of lean concrete. This is normally provided to obtain a good quality concrete. This is normally done to avoid contamination of newly prepared concrete with impurities when lifting it into headpans or wheel barrows for

transportation to final point of placement.

2.4 Concrete Production

2.4.1 Mix Design

This can be defined as the process of selecting suitable ingredients of concrete and determining their relative quantities with the object of producing as economically as possible concrete of certain minimum properties, notably consistency, strength and durability. The following will affect the strength of concrete:- water-cement ratio, aggregate-cement ratio and the aggregate sizing (sieving).

Water-Cement (W-C) ratio: From the curve in figure 2.2 on page 18, it is expressed that the strength is dependent on the water-cement ratio. Hence, for a fixed quantity of material with increased water-cement ratio the curve tends towards zero value of compressive strength. This implies that there is too much water and a weak concrete is produced. On the other hand, when the water-cement ratio is low a harsh mix is produced. Waddell (1974, P. 6-3) states that "a 1:2:4 mixture, by weight, may have relatively good or poor strength depending on the amount of water added".

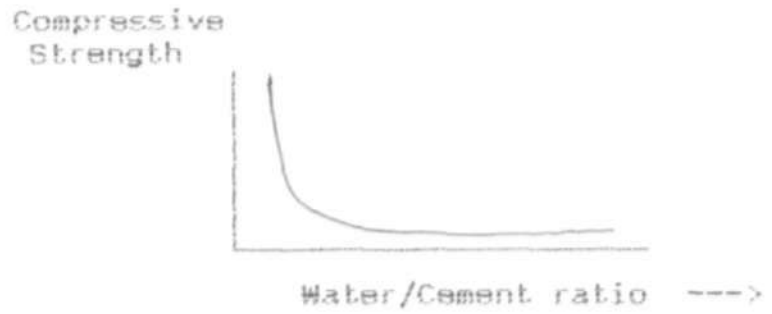

Fig. 2.2 Curve Of Effect Of Water-Cement Ratio On Compressive Strength (Adapted)

Source: Joseph J. Waddell. P. 6-3

Aggregate-Cement Ratio: During the measuring of aggregates for a mix proportion, the presence in excess of one of the materials against what was specified, alters the strength of concrete produced.

According to Neville (1973, P. 590) when there is excess of fine aggregate of size (600Um) in a supply it should be reduced by an amount equal to 10% of the total aggregate (coarse and fine). Also, for coarse aggregate, it should be reduced like-wise and fine aggregate added. If lots of coarse or fine aggregate are in a particular mix proportion against the specification, there will be not enough cement, resulting in low concrete strength.

The figures on the next page show the normal pattern for gradation of aggregates to be used for high quality concrete. Figure 2.3 for aggregate size of 19.05 mm and figure 2.4 for 9.52mm.

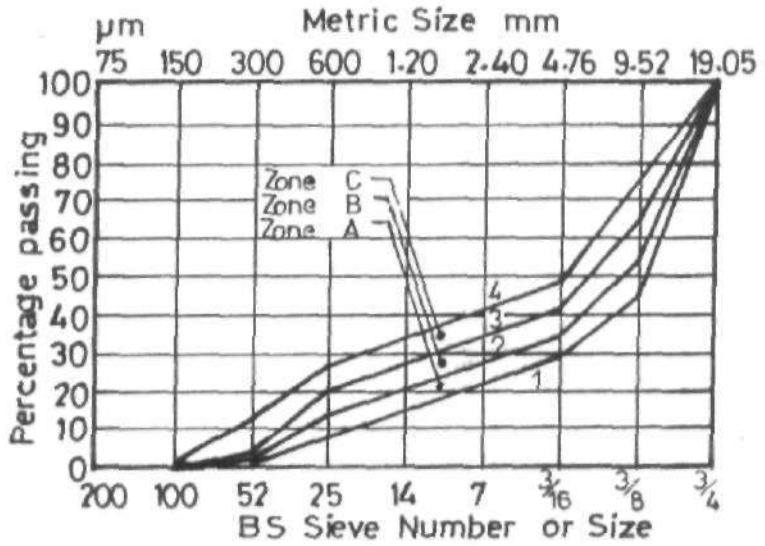

FIG.2.3 Road Note No 4 type grading curves for 19.05mm (3/4 in.) aggregate [3.25]

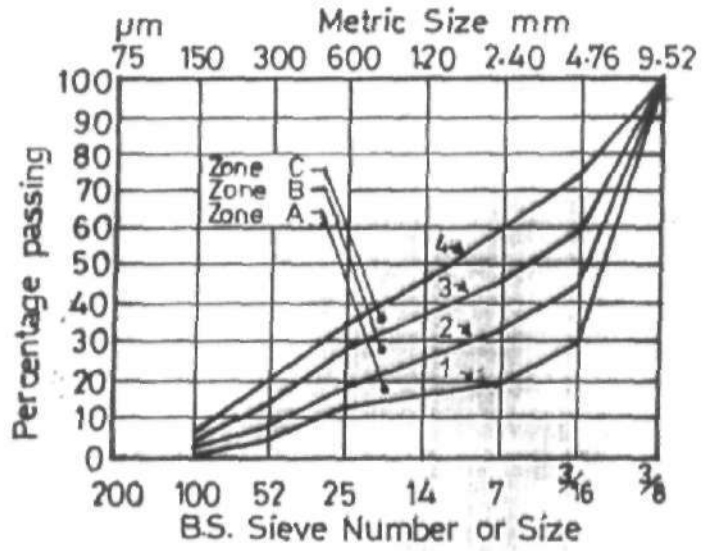

FIG.2.4 McIntosh and Erntroy's type grading curves for 9.52mm (3/8 in.) aggregate [3.24]

SOURCE:- A.M. NEVILLE (1973)

Sieving: Aggregates are sieved for correct grading and for the removal of deleterious materials from consignment. This is the act of passing aggregates through required aperture of standard sieve sizes for the removal of impurities and correct grading of consignment i.e. removing larger size materials in them.

Sand should be sieved to remove dust and other unwanted particles and impurities.

Coarse aggregates should be sieved for correct gradation and removal of impurities such as decomposed wood etc. Most of the coarse aggregates used in construction/building are produced using hand (hand crushed). This results in unevenness of sizes of materials, giving rise to the need for sieving the material. Bloem and Gaynor (October,1963, P. 1429) stated that:

> On site, when aggregates of size up to 38mm are seen within consignment or deliveries, they should be removed and that results of earlier work confirm indication that, at equal water-cement ratios, smaller size of aggregates produce higher concrete strength than large ones. Hence the sustenance of load on the areas of lower concrete strength might lead to failure of the structure, which should be checked merely through the process of handling.

Principles of Mixing: Mixing is the process of coating the particles (aggregates) with cement paste (water and cement) to uniformity. There are two methods of mixing Orchard (1973, p. 352) "mechanical and manual mixing". For mechanical mixing Murdock and Brook (1979, P.144-146) and PCA (1975, P. 277) noted the principles to be observed for mixing of materials for concrete for high quality production. These are:-

i) It is an advantage to feed cement sand and coarse aggregate

into the mixer simultaneously. The concrete produced is more uniform than that obtained when the ingredients are introduced one after the other.

ii) Water should be in the drum prior to the ingredients for a uniform mix.

iii) Mixing should continue until the concrete is of uniform consistency and colour.

iv) Mixer should not be loaded beyond its rated capacity in order to ensure thorough mix.

v) Mixer should be set up accurately so that the axis of rotation of the mixer drum is horizontal. Setting it at an obtuse angle results in poor mixing.

vi) Mixer should be run at the specified speed and check constantly or regularly. PCA (1975, P. 282) gives aggregates sizes after five minutes of mixing. This is shown in section 2.3.2.

Overmixing of Concrete: Overmixing then is blending together the constituents of concrete beyond the specified time of doing so. PCA (1975, P. 281) said that mixing of concrete is a grinding process. Prolonged mixing can produce excessive grinding and reduce the size of aggregate. If there is reduction in size, it means an increase in amount of fine aggregate and consequently reduction on the coarse aggregate. This could affect the strength of concrete produced.

Murdock and Brook (1979, P. 143) gives the time limit for

revolution per capacity of mixer as shown in section 2.3.2

2.4.2 Equipment for Transportation of Loose Materials

Before concrete is produced, the loose materials are first transported to the batching point. During this process, materials are contaminated through the use of these equipment.

(a) Head Pans/Wheel Barrows: Figure 2.5 shows a headpan and wheel barrow. They are used for the conveyance of sand, gravel and cement in small quantities to mixing point on site.

At this stage when the materials are in dry state, the headpan and wheel barrow do not have any effect on them as they are transported on site.

(b) Dumper: A bigger equipment used in the transportation of earth (spoil), cement, gravel and fine aggregate. When materials are in dry state, the machine do not have effect on the quality of materials except for cement. If the machine off-loads, often the cement bags get torn, cement then poured on the ground and while packing them impurities (earth) are included.

This may affect the strength of concrete produced.

(c) Shovel, Fork-Lift And Face Shovel: Harris (1981, P.194) shows the diagrams of shovel and face shovel/fork-lift truck, shown in Figure 2.6. Shovels are used in the transportation of

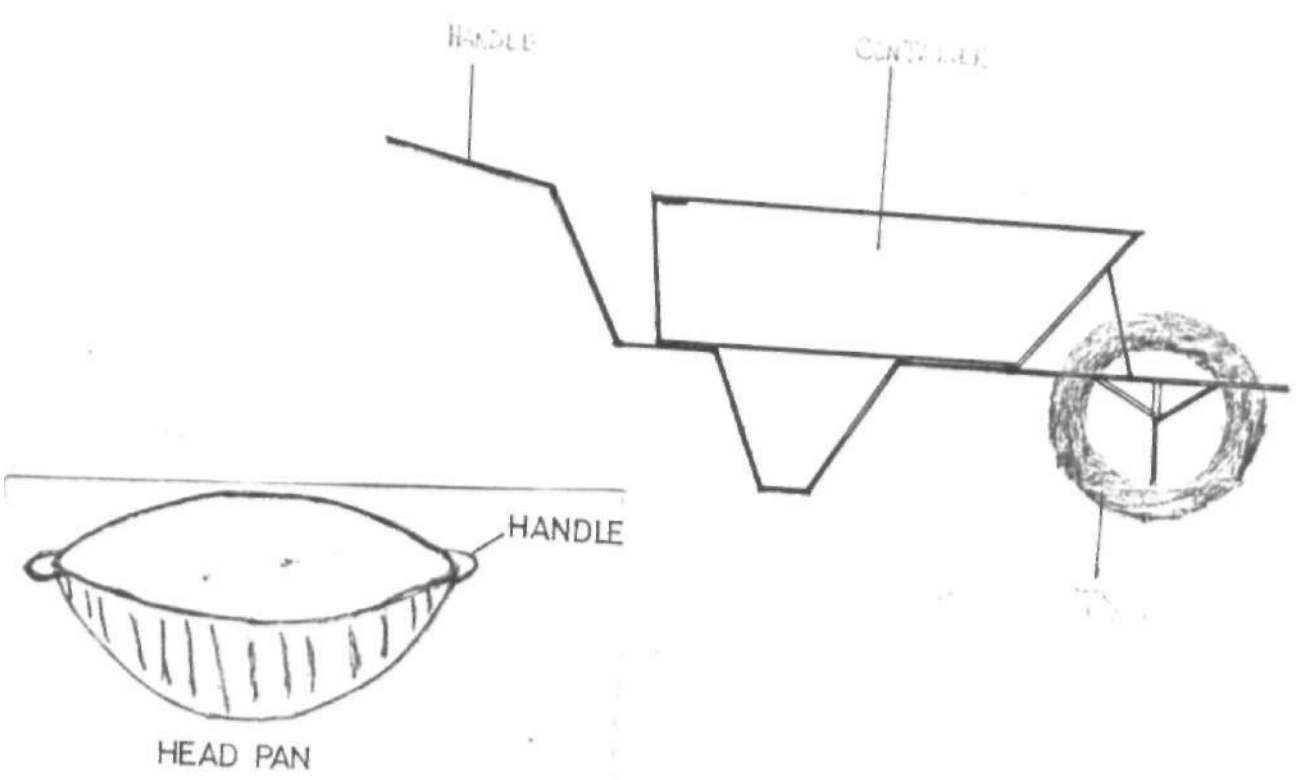

FIG 2.5A Head pan and Wheel Barrow

SOURCE :- Drawn by Authur

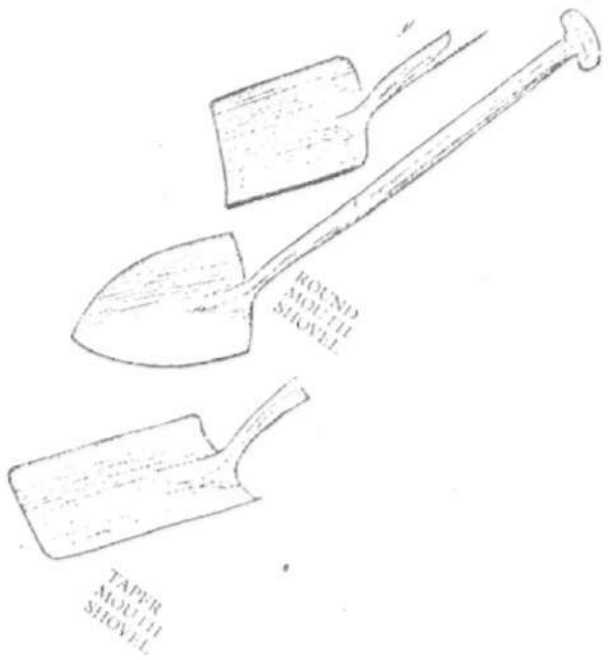

HAND SHOVEL

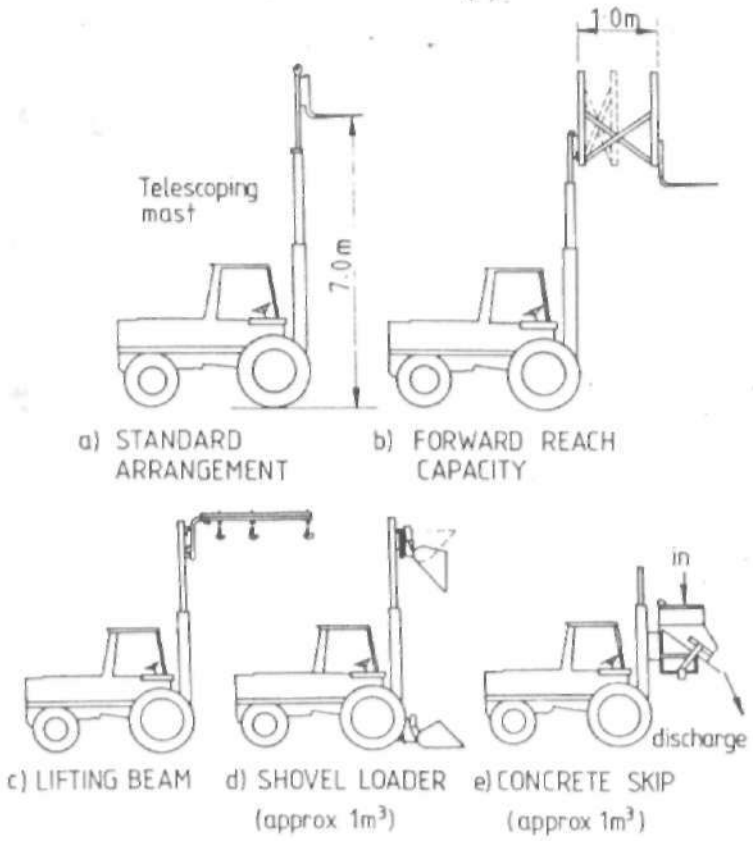

FORK-LIFT TRUK OPTIONS

FIG. 2.6 Hand Shovel, Fork–Lift Truk Options

SOURCE:- FRANK HARRIS (1981)

aggregate from storage position to head pans, wheel barrows and buckets of batching plant of concrete mixer.

These materials for concrete for example aggregates are stored directly on the ground and in the process of packing them, spoil is usually packed along which affects the quality of concrete produced.

(d) Bucket for Water and Rubber Hoist: These are used for the lifting up of water into the drums of mixing plant and concrete mixers. They are usually of no effect to water being carried.

2.5 Properties Of Good Concrete Mix

2.5.1 Workability

The major property of wet concrete is its workability which is defined by PCA (1975, P. 173) as "the ease with which concrete can be mixed, transported, placed and finished without loss of homogeneity". A good concrete must be workable. Its workability tell a great deal on its finishing.

Easy compaction is one of the requirements for workable concrete. If concrete is not workable it will not allow for maximum compaction.

This is carried out to eliminate entrapment of air and increase the density of the concrete. The density of a concrete is a direct relation of concrete strength. From PCA (1975, P.174) "little as 5% voids in a volume of concrete can reduce strength as much as 39%,

while 2% voids can reduce overall strength by more than 10%". There are some factors that have direct effect on the workability of the concrete either negatively or positively. These are enumerated below.

2.5.2 Factors Affecting Workability

The major factors affecting workability are:-

i. Amount of water in proportion to cement
ii. Amount of aggregate in proportion to cement
iii. Quality of cement

i. The quantity of water used in a mix affects the quality of the mix, while insufficient water makes the concrete difficult to place and hard to finish. Wet mix tends to segregate, that is aggregate staying together in the centre and cement paste running towards another side. These two factors do not allow for easy compaction of such concrete.

ii. For each water-cement ratio, there is one coarse-fine aggregate ratio that produces optimum workability. In the situation that the water cement ratio is kept constant and the coarse aggregate are varied, this affects the workability because at a stage, it will become stiff. PCA (1975,p.177) states that "Coarse aggregate of the rounded variety is most desirable for good workability. Sand to be used in concrete, it's amount passing through sieve size 0.3mm (No. 52) and 0.15mm (No. 100) shall be very small in grading" i.e. in

2.5.4 Segregation

P.C.A.(1975, P.174) defined segregation as "The separation of the constituents of concrete mixture so that their distribution is no longer uniform". Segregation is detrimental to concrete as it prevents proper compaction and results in weak and porous layers, causing rock pockets and surface scaling.

Some occurrences of segregation are due to poor mix design, and poor handling. Harsh concrete produces extremely dry mixes or under sounded mixes and thus may segregate even with careful handling.

The following are precautions that should be taken during placing to avoid segregation which may result in honey combing of concrete and leakages of flat roof concrete structures.

i. Concrete should be deposited as near as practicable tt its final position.

ii. Concrete should be deposited in horizontal layers and each layer compacted well before the succeeding layer is placed.

iii. Concrete should be placed at ends of expansion joint or surface to avoid the appearance of unsightly left line on the finished structure.

iv. Around the fixtures, reinforcement and corners of formwork, concrete should be worked thoroughly or well compacted.

2.5.5 Causes of Segregation

There are many factors responsible for segregation. Stewart (1962, P.4) and Murdock and Brook (1979, P.126) noted the following as causes of segregation:-

i. At the discharge of the mixer - concrete falling through too great distance into a container and when container is small, not containing the whole batch of mix, this phenomena occurs.

ii. During transportation between mixing point and placing point - due to jolting and swinging of the truck. The amount of segregation depends, apart from the mix itself, upon the length and roughness of the journey. Mixes should always be tightly packed when undergoing transportation.

iii. At the dumping point - when concrete is being discharged into formwork, it should be dropped vertically and care should be taken to avoid the continuous formation of a conical heap. This is done by moving the vertical nose (Skip or buckets) dropping the concrete around.

2.5.6 Retempering

Retempering is a bad practice sometimes done in the handling of concrete. It is defined as the adding of water to concrete to restore workability as a result of it's fall due to loss of moisture, this may be as a result of delay in placement of concrete.

According to Neville (1973, P.208) "This will lower the strength of the concrete especially if the added water forms part

of the effective water which governs the strength". Neville (1973, p.218) states that "an additional slump of 20mm caused by adding water to ordinary concrete mix lowers it's 28 days compressive strength by 1.5 N/mm^2 and increases its permeability".

2.5.7 Agitation of Concrete

A process of providing gentle motion to concrete, for the purpose of preventing segregation of it. Plant mixed concrete may be agitated for 7 hours in a temperate climate region and tested for 28 days without any loss of strength. But in hot climate countries agitation for more than 3-4 hours may reduce the compressive strength by more than half due to loss of water in the mix.

2.5.8 Compaction of Concrete

A process of tamping newly placed concrete to eliminate air entrapment. This is carried out to increase the density of the concrete and compressive strength. Murdock and Brook (1979, P.197) states that "compaction is the process of eradicating air pores to achieve maximum density of concrete". This is done by several methods such as insertion of iron rod or surface vibration of the concrete. Some of the methods of compaction are explained below.

i. Hand Compactors - Consist of roding, tamping and spading with suitable tools mostly of wooden range.

ii. Internal Vibrator - The pocker vibrator, attached to it is the rod which while in operation is inserted in concrete. It vibrates the concrete and aligns them.

iii. External Vibrator - The vibrator is rigidly clamped to the formwork, resting on an elastic support so that, both the form and the concrete are vibrated.

iv. Surface Vibrator - This is placed directly on concrete surface. They have a wide surface board with petrol engine machine.

Compaction is an activity that goes hand-in-hand with placement. Immediately concrete is in place, it should be well compacted. Murdock and Brook (1979, P.197) holds the view that "one of the advantages of compaction is that it is able to use less workable mixes which gives increased and lower drojing shrinkage for given mix proportions".

2.5.9 Curing of Concrete

Concrete develops strength as it is being cured. According to Ferguson (1979, P.8), "curing of concrete requires that the water in mix should not be allowed to evaporate from the concrete until it has gained the desired strength". Curing is the process of promoting hydration of cement. This is done by controlling or by ameliorating the temperature of the surrounding concrete, thus controlling the moisture movement from and into the concrete.

Curing is done by either complete submerging of concrete cube in water tank or the use of sacks to cover cubes kept in an environment of temperature 19°C + 1°C and water poured on them daily in the morning and evening or kept in damp areas.

Early, progressive effective curing for a practical period is an essential operation for adequate and uniform development of a cementitious matrix between concrete materials. Thus not only increase the compressive strength of concrete but improves the requisite qualities of durability, impermeability, abrasion resistance and general dimensional stability of the concrete. Figure 2.7 on page 33 shows the influence of curing on the strength of concrete. As shown, the cube that was kept continuously moist at 14 days attained the same strength at a point and later greater, with that kept in air for 28 days.

2.5.10 Contamination of Loose Materials of Concrete

Before concrete is produced, the loose materials are first transported to the batching point. During this process, materials are contaminated when care is not taken through the equipment used.

Contamination Through the Use of Hand Shovels, Fork-lift and Face Shovel: Frank (1981, P.194) shows a diagram of shovels and face shovels/fork lift truck, shown in figure 2.6. They are used in the transportation of aggregates from storage positions to head pans, wheel barrows and buckets of batching plant or concrete mixer. These materials for concrete (aggregates) are stored directly on the ground and in the process of packing them, spoil is usually packed along which affects the quality of concrete produced.

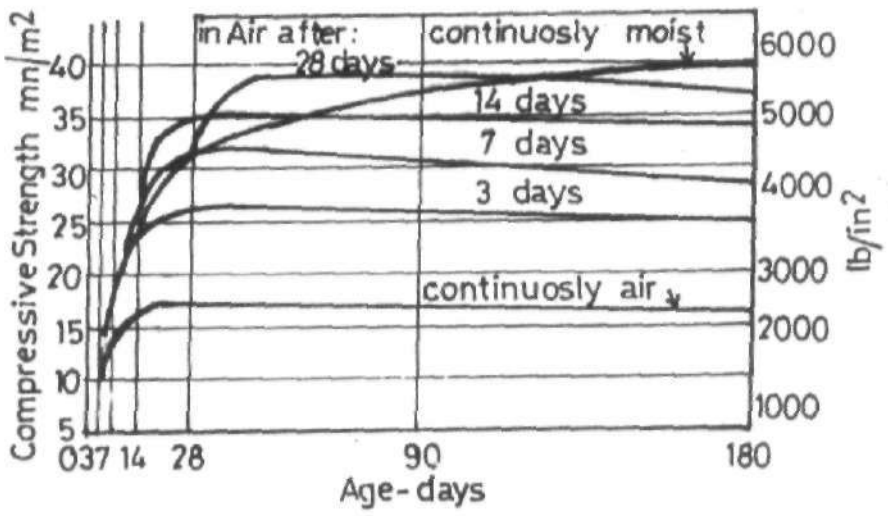

FIG.2-7 The influence of moist curing on the strength of concrete with a water/cement ratio of 0.50[5-11]

SOURCE :- A.M. NEVILLE (1973)

AHMADU BELLO UNIVERSITY
KASHIM IBRAHIM LIBRARY

Contamination Through the Use of Dumper: A bigger equipment used in the transportation of cement, gravel and fine aggregate. Dumper on its own does not contaminate the materials. But during its operation, cement that are lifted in them get contaminated during off-loading as the cement paper bag tears and cement pours away to the ground. As it is packed earth is packed along, thereby contaminating the cement.

2.6 Transportation Of Newly Prepared Concrete

Concrete is transported in two ways, horizontally and vertically. The type of operation determines the mode of transportation to be used. Below is a categorisation of these two ways of transportation of newly prepared concrete with respect to the equipments that are used.

Horizontally, these include:

Wheel barrow, hand carts, light trucks, skips on rail, dumpers, lorries and mono-rail.

Vertically, these include:

Steel skips and buckets on cranes, chutes, belt conveyors, concrete pumps and pneumatic placers with pipelines.

In these two means of concreting, there are three requirements to be met. These are:

i) Transportation must be rapid so that the concrete does not dry out or loss its workability or plasticity between the time of mixing and placing.

ii) During transportation the loss of true materials or cement

paste should be prevented.

iii) Transportation of section or complete batch of concrete should be organised so that delays can be eliminated.

2.6.1 Equipment and Plant for Transportation of Newly Prepared Concrete

(a) Concrete Pumping Machine: Frank H.(1981, P. 219) shows a truck mounted concrete pump fig. 2.8 and Murdock and Brook (1979, P. 159) shows a mobile concrete pump figure 2.9 contained on page 36. The pumps can be seen right above the trucks. They are the equipment used for transportation of concrete vertically (mostly high rise building). During the process, concrete is kept in an undisturbed position. There is no segregation resulting from jolting, thus the quality of concrete is high. Care must be taken at the point of placement in order that concrete is not poured to make conical heap.

(b) Forklift Truck: Since the early 1960's the fork-lift truck has made a great impact on materials handling in the construction industry and in particular on general building works. Frank (1981, P.184) shows the equipment and the working of a fork lift (figure 2.6). Diagram E has the skip in which concrete is taken in and transported to position of placement. Segregation of concrete using this equipment is drastically reduced if there is any. The time of receiving and discharging concrete is short, hence the production of high quality concrete.

(c) Mono-Rail: Murdock and Brook (1979, P.156) Says "mono-rail are suitable for transportation of concrete over congested site" This is shown in Figure 2.10 on page 38, the single curve iron laid on the ground is the mono-rail, and a large trough where small quantities of concrete at intervals have to be transported over a considerable area. It consists of a rail and a trough, the rail can be inclined so that concrete can for instance, be conveyed to the upper floor of a two storey structure. It has no damaging effect on the quality of concrete produced, as a result of travelling over a great distance in a short time. Note that this journey is smooth.

(d) Cranes: Frank H.(1981, P.109-163) listed the different kinds of cranes for the transportation of concrete. They include:-

- Crawler mounted crane.
- Self propelled crane on rubber tyre wheels.
- Self propelled telescopic - jib crane.
- Tower crane.

Basically the construction of these cranes is the same except for some addition of parts or tyre types. There is attached to the boom of the crane a bucket in which concrete is transported. Transportation is through the air, hence concrete by this form of transportation is not disturbed to cause segregation thereby affecting the quality of concrete produced.

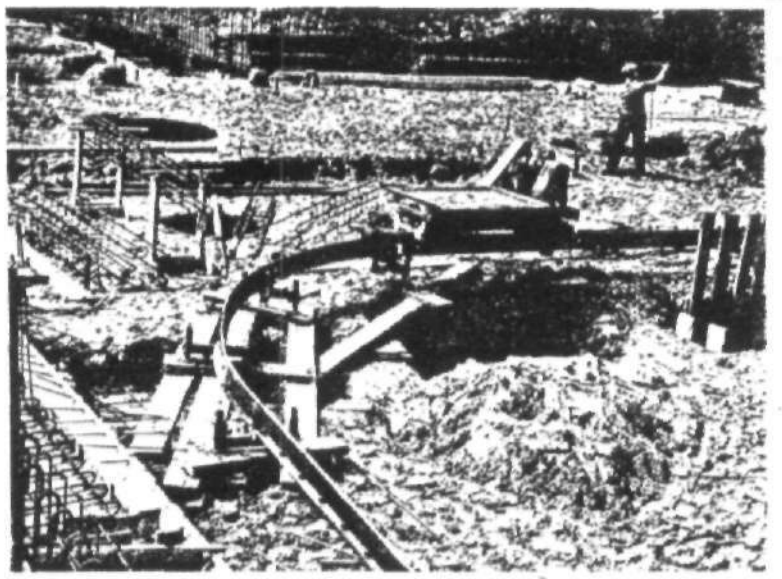

FIG-2.10 Mono- rail transporter.

SOURCE:-MURDOCK . AND BROOK (1979)

(e) Belt Conveyor: It is a machine having a device on which concrete is transported. This device is a belt moving round in a fixed system, on the top face of the belt concrete is placed and then transported to point of placement, where it is discharged. This kind of transportation has a negligible effect on the quality of concrete being transported.

(f) Concrete Mixers: An example of concrete mixer is shown in figure 2.11 on page 40. There are fixed position and mobile mixers. Emphasis shall be laid on mobile mixers, as they travel from mixing point to placement point. With this equipment, since agitation takes place as the concrete is being transported, the concrete is kept fresh and in good blend having no effect on its quality.

(g) Transportation of Concrete by Wheel Barrow/Head Pans: These equipment are used mostly on all sites. The problem arising from the use of these instruments is that when they travel along rough pathways, there is the occurrence of jolting of the concrete and later resulting in a phenomenon called bleeding. At the point of discharge this concrete is poured up side down without mixing causing segregation and a source of weak zone on the concrete.

(h) Dumpers: An equipment used also for the transportation of concrete for ground floor casting. It has the same effect as wheel barrow but not at a high level as wheel barrow.

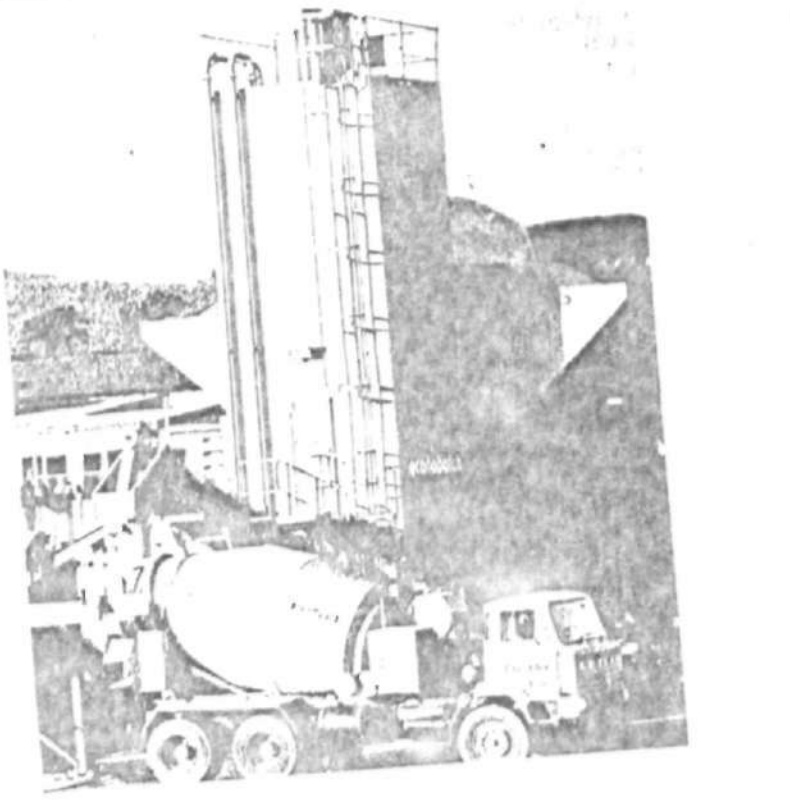

FIG. 2:11 CONCRETE MIXER

SOURCE :- Murdock and Brook (1979)

2.7 Properties Of Hardened Concrete

2.7.1 Compressive Strength

The compressive strength of concrete when determined is an indication of the quality of the constituent materials of the concrete. Concrete is a compound consisting of some materials, the quality of these materials dictates the quality of the concrete.

For a concrete to be said is of good, quality, its compressive strength, when determined through crushing of cube, should meet the specified by the British standard. See Table 2.4.

TABLE 2.4: Compressive Strength of Concrete

Comprehensive strength in (N/mm^2)	Age (in days).
14	7
17	14
21	28

SOURCE: (1) British Standard 12 (19 - P.10) for Seven days strength.

(2) Field (from site) For Twenty-eight days.

(3) By Interpolation for Fourteen days.

2.7.2 Density

The density of a material is defined as its mass per unit volume. This is calculated by the relation Density = Mass (in - kg)/volume (in m^3).

The density of conventional concrete according to Orchard (1973, P. 141 - 142) ranges "from 235kg/m^3 to 2563.2kg/m^3 while light weight concrete is between 400.5kg/m^3 to 1762 kg/m^3".

2.7.3 Permeability

This is the ability of fluids to pass through the structure of a material. Concrete is inherently pervious to fluid because not all the spaces between the aggregate particles are filled with solid cementitious materials. This phenomenon is reduced to a minimum by using well graded aggregate, good compaction and correct water cement ratio.

2.7.4 Durability

A concrete said to be durable is that which can withstand weathering action, chemical action, and wears over a long time. Uptil now there has not been laboratory reports in relation to field exposure of concrete to measure the length of time, during its life span concrete could be said is durable. But for a concrete to be said to be durable it should be able to withstand exposure to the above mentioned phenomenum over a period of more than thirty years.

2.7.5 Tensile Strength

This is the strength that mainly reduces cracks formation in concrete. The tensile strength depends mainly on the properties of mortar and coarse aggregates. Three kinds of tests are used to determine the tensile strength, viz: direct tension, flexural test and indirect or splitting cylinder test.

Direct tension has close relation to compressive strength of concrete. An increase in compressive strength produces a decreasing

tensile strength. Flexural and splitting tension test are carried out as specified in B.S 1881.

2.8 Quality And Training Techniques

2.8.1 What Constitutes Quality

Quality stands to be the most important property of concrete.In expressing this term the following references were quoted. According to Obiegbu (1994; P.3),"there are difficulties in attempting to establish what constitutes quality in building because often, it is a subjective concept which like beauty is in the eyes of the beholder". Also, quality in construction practice cannot be subjected to scientific test. Although considerable disparity pervades, there is much commonality amongst various definitions.

The references point in the definition of quality is the British Standards B.S 4778 (1971) which states that "quality is the totality of features and characteristics of a product or service that bear upon its ability to satisfy a given need".

Another definition that is mostly referred to and correctly defines quality is that which is given by Besterfield (1990, P.235) which define quality as "the totality of features and characteristics of a product or service that bear on its ability during its life-time to satisfy stated or implied needs". While these stated needs are its conformance to specification, (example in concrete is, does it meet the specified compressive strength).

The implied needs are needs that the building is erected for, that is, how best it meets it functionality.

From the two definitions above, for quality to be complete it has to satisfy a given need, not only when it is made but its ability to satisfy stated or implied needs during its life-time.

Besterfield (1990, P. 235) claims that "quality has nine different dimensions. These include: performance, features, conformance, reliability, durability, service, human-to-human, aesthetics and reputation". A few of these that are relevant to this work will be discussed.

i. Conformance - Meeting specifications or industry standards, an example is compressive strength, workmanship which entails the handling modes.

ii. Durability - The materials used, being of good quality to withstand given forces, e.g. abrasion (wear) among others.

iii. Reliability - Consistency of performance over a period of time. It should not fail shortly immediately after the construction.

According to Tunde (1994,P.10) "the contractor is the key figure in the realisation of quality in construction". This means that on the site the totality of ensuring quality rests on the project executor.

Obiegbu (1994, P.10) also reaffirms that "the contractor has

a positive role to play in the formation and achievement of quality in building projects". Quality in practical terms is the provision of an acceptable standard of construction within the prescribed time and cost. Quality at the workplace is concerned with workmanship which is the measurable aspect of quality on site. The aspect of workmanship and sites management practices that affect negatively quality are:-

- Lack of Skill
- Lack of Care
- Lack of Technical Knowledge
- Lack of protection of materials

To achieve quality during project execution, some standard contract conditions provided clauses that will redirect the contractor towards quality constructions. Amongst those clauses from the JCT (1980) are those which have particular influence on quality of the finished product.

Clause 8 states that "materials, goods and workmanship to conform to description, testing and inspection".

The clause seeks to ensure that the quality of materials be as specified in the contract bills. It therefore reinforces the information contained in the bills of quantities. The contractor must whenever required to do so, prove that the materials being used are in accordance with the specified requirement. For the purpose of this thesis, the testing of only concrete cubes shall be

carried out. An experiment performed to show, through the characteristic strength, the quality of material used on site for concrete production.

According to Obiegbu (1994, P.13) "to achieve good quality on site, the contractor has to provide skill training to his staff to meet the changing requriement of the industry".

Kunle (1994, P.17) claims that "it is obvious that the issue of quality management goes beyond products. There is a need to institute specific training for production of materials and operatives in construction".

2.8.2 Personnel Requiring Training

According to Rayo (1994, P.14-18) "all the personnel involved in the construction process from the stage of briefing to the end of defects liability period and even at maintenance must be trained in the principles of what constitute good quality in construction". Thus the personnel are broken down into:

(a) Top Management staff;

(b) Middle Management staff;

(c) Tradesmen and Artisans.

(a) Top Management and Quality: The top management's attitude towards the assurance of quality in construction dictates the level of the quality which will be achieved in it's products on the field. The management which appears to be unconcerned with quality

but busies itself with cutting corners by the use of poor quality materials, poor staff and subtle corruption in its project execution will have good quality permanently absent from its outfits. Hence will constantly be in the danger of losing all on any project it handles including losing competency. Quality training for top management should be an informal one which can be obtained by in-service training and should emphasize the management aspects of quality control. For instance, attendance of conference *on quality and management of human resources.*

(b) Middle Management: The quality assurance officer or engineer is actually of middle management cadre, having received an University degree and is involved with quality control job. His duties involve field inspection, verification and laboratory testing.

Technicians And Technical Assistants

They assist the quality officer and supervisor as field assistant, inspector assistant and laboratory assistant, they are the quality maintainer or assurance inspectors.

(c) Tradesmen And Artisans: On the side of contractors, quality awareness should filter down the tradesmen involved in concreting, block laying, welding, steel placer or fitters, plumbing, roofing etc. This level of quality awareness is very important. Because they are the doers, they must know what the supervisor or inspector is looking for and how to achieve

it through the labourers.

2.8.3 Training Avenues

Taylor (1975, P.184) and Glueck (1978, P.349) claim that "principally, there are two training avenues for any professional discipline, namely formal and informal".

(a) The Formal: Formal is the educational system while the informal which may include some aspects of education, is generally from the industry. As it is widely obtained, the formal education, for example, the University education is where people go to learn and obtain degrees.

(b) The Informal: Informal training for quality embraces continuing professional Development, organised training courses, in-house traineeship and vocational training. Each of these applies to different levels of personnel involved in ensuring quality as outlined above.

Chapter 3

SITE INVESTIGATION

3.1 Preamble

Concrete practice was investigated on fifteen selected sites in Zaria, Kano, Kaduna and Abuja.

Three methods were used in the investigation:-

a. Personal observation of activities on site

b. Testing of site concrete

c. Through a well structured questionnaire.

Construction activities in Nigeria are carried out in similar ways in every part. Hence, a restriction to these areas mentioned due to reasons explained below as constraints. A total of eighteen questionnaires were distributed and fifteen were returned, representing 83.33% response. The basis for the application of questions was to find out the most occurring phenomenon on site and the questions were asked in such a manner that will reveal concrete practice on site. They include questions of suggestions to respondents through multiple options, true or false and yes or no types, questions that each answers are ranked and those requiring brief statements to be written.

Below is discussed problems that stood as constraints on data collection and names of construction companies visited are on table 3.1.

a. There was delay in receiving questionnaires from respondents.

This was probably due to the busy nature of the site agents caused by the jobs handled by these companies.

3. Respondents did not answer some questions properly referring to them as classified information, thereby making it difficult in analyzing such answers in the questionnaires.

4. Another problem that was experienced was the difficulty in getting approval from co[illegible]s' head [illegible]e questionnaires were filled and prior to carrying out research on these firms' sites. This re[illegible]n-approval of some, for th[illegible]r of revealing findings after c[illegible] promised on information gathered.

Table 3.1 Names Of Construction Sites Visited

ITE NO.	NAME OF COMPANY	LOCATION OF PROJECT	SIZE OF PROJECT	STAGE OF WORK	DATE COMMENCEMENT
.	Dacco Nig. Enter.	Abuja (Garki)	10m	1st floor casting	Jan. 1995
.	Godab Nig. Ltd.	Abuja (Wuse)	175m	2nd ,, ,,	Dec. 1994
.	Rofasy Nig. Ltd.	Zaria (Main Campus)	2.5m	Ground Floor Casting	Feb. 1995
.	Shillour	Zaria (Kongo Campus)	9.5m	Casting of Beams Col.	Sept 1994
.	Sama Nig. Ltd.	Zaria (Kongo Campus)	3.5m	1st floor casting	Jan. 1995
.	Costa Constr. Ltd.	A.B.U Stadium Kaduna	5.5m	Col.& Bean Casting	Jan. 1995
.	KSEPOA	Binin Kebe Village Kano	7.5m	Slab Casting	Mar. 1995
.	Alh. Modu Mala & Sons Const. Company	NHP (Kado Site Abuja	5.6m	Slab Casting	Mar. 1995
.	Alh. Bako Zuntu Const. Company	NHP (Kado Site Abuja)	5.6m	Slab Casting	Mar. 1995
0.	Standard Nig. Ltd.	Audu Bako Secretariat Extension Kano	10.7m	1st floor Beams & Slab	Apr. 1995

11.	Kaduna State Property Development Company	Barnawa New L/Unit Kaduna	8.6m	Beams & Slab Casting	Mar. 1995
12.	Team Four Construct. Company Ltd.	Ibrahim Taiwo Rd Kaduna	3.7m	Casting of Colums	Jan. 1995
13.	Solid Builders	Wurno Road, Kaduna	6.3m	1st floor & B/Casting	Jan. 1995
14.	Bolten Ventures	Kaduna Polytech. T/Wada Kaduna.	2.3m	Ground floor S.Casting	Feb. 1995
15.	Tropicon Engineering	Kofa Mata Indoor Stadium Kano.	22.8m	Beams & Slab Casting	Feb. 1995

Source: Field Survey of Author.

3.2 Researcher's Observation On seleceted sites

Visitations were made to all the sites selected for this research in order to provide the researcher with first hand information on concrete practice on these sites. This was also intended to serve as a cross check for the information gathered through the questionnaire.

3.2.1 Properties of Materials on Site

Note: Under this section kindly make use of table 3.1 to obtain the full names of companies whose sites were discussed, since they had been numbered serialy on the table.

Cement: Cement that has caked and aggregated were found in heaps, on bare grounds on most sites.

Aggregates: Fine and coarse aggregates were stored dir[illegible]on bare ground on most sites, except a company that stored this material on lean concrete. Impurities such as roots, charcoal, sugar cane chaff, groundnut shells and weeds were [illegible]d on

these aggregates.

Water: Six sites, two in Kaduna (6,14), two in Abuja (8,9) one in Zarai (5) and one in Kano (7) had algae contained in their water. On most sites, it was observed that the colour of water in storage looks greenish and had odour.

3.2.2 Storage Of Materials On Site.

Storage of Cement on Site: Cement was found in various conditions of storage on different sites. On most sites however cement in paper bags were stored on bare ground in temporary shelters made from zinc roofing sheets on hardwood framework. These temporary storage shed have no platform of wood provided for placement of cement. cement that have poured from their packaging bags during off-loading are heap exposed in this storage shed and torn bags of cement are not sealed, they are left exposed for a very long time. Inquiry shows that, they are left in this condition most times beyond two weeks before use.

Aggregate: Fine and coarse aggregate were stored directly on bare ground. One company has its aggregates stored on iean concrete and it is away from the batching point, uses face shovel machine for the transportation of loose aggregate to batching point. The base of this lean concrete can accommodate a large quantity of these aggregate and as it is about finishing a new order is made. Observed fresh grass on consignment of fine sand for mixing on most site, due to this reason. The ground on which they are stored were not prepared. Grasses and other materials were not cleared before the materials were stored on the ground. Impurities such as

roots, sugar-cane chaff,charcoal and ground nut shells are seen in them. Also,clay, mud, silt were found in them.

Impurities such as mentioned for fine aggregate were al[illegible] in consignment of coarse aggregates. In addition decomposed rock and hand crush gravel were mostly used on site.

Water In Storage: Water tanks both under and surface were used for water storage on sites. When it was observed that the colour of water used on most sites look greenish, inquiri[illegible] made from operatives on the sites in regard to cleaning of their water tanks. The researcher was told that, when ever the water looks greenish they clean and that no specified time was given to them for the cleaning of their water tanks. On site 11 in kaduna, mud was seen in water used for mixing concrete.

3.2.3 Transportation Of Aggregate, Cement And Water On Site

On most sites aggregates were transported in wheel barrows and by face shovels to the drum of concrete mixers. It was observed that during loading of these materials, earth were packed along with other impurities. When ask why they would not sieve to remove impurities, the workers response was that,it is time wasting and an unnecessary burden.

Cement were transported in wheel barrow and individuals head to point of mixing with little or negligible tears recorded of them. Water on site was mostly transported through rubber hoist and bucket which are in good conditions.

3.2.4 Batching

At the point of mixing the following was noted:
Mixing platform, sieving and supervision. On sites 5 and 9 it was noted that, the centre of their platform for mixing concrete had eaten up, with the effect that when loading labourers headpan with concrete earth is packed along and not removed. Instead they further mix it together for a singular reason given that cement is costly and other materials so that wastage could be curtailed.

Enquiry was made as to how the platforms were made, sites 5, 11 and 14 in Kaduna, 4 and 3 in zaria, 10, 7 and 15 in Kano and 8, 9 in Abuja said the top soil grass were removed and they continue to use the area of land for mixing, then it was built to the present state. This implies that there wasn't any platform made of lean concrete. This then resulted in the wearing away of the left over concrete or mortar on ground.

During visits to sites, no foreman was ever seen to stay by the concrete mixer to control the quality of concrete produced, or even regulate the time of mixing. Four of the concrete mixer seen in four sites among all sites investigated were said to have broken down and that mixing is done manually (by hand). This indicates the quality of concrete that would be produced. Definitely, it will be of no uniformity while observing impurities in mixture, the notice of the masonry foreman was drawn in each case to these and were asked for their removal. The answer received was that they have no effect on the quality of concrete produced. On further

investigation about the level of qualification of these foremen, it was found that they rose through experience to this post after apprenticeship. A general survey of the level of qualification of foremen made revealed that only two companies in Abuja site 8 and 9 have foremen that had Trade Test II. All others fall into the category earlier discussed. This shows the level of quality consciousness and commitment towards obtaining good quality concrete.

3.2.5 Transportation Mode Of Concrete On Site

From personal observation on the sites, the pathways through which concrete is transported is rough. Majority of the sites except two in Abuja Sites 1 & 2, used, crane for the transportation of concrete, in all other sites, head pans and wheel barrows were used. This causes jolting of the concrete leading to segregation. When the concrete is placed, honeycombing are seen as formwork are removed. These areas of honeycombing are sources of weak zones and eventual collapse of buildings or of leakages.

3.2.6 Placement And Compaction Of Concrete

It was observed during placement of concrete the use of short handwood rammer and wood range for compaction of column and slab in all the sites. The companies of exemption, are companies of sites 1 & 2 in Abuja which use pocker vibrating machines. When enquiry was made of the reason for using wood rammers, they replied that they cannot afford mechanical vibrating machines.

462944
KASHIM IBRAHIM LIBRARY
RECEIVED
4 DEC 1993

3.2.7 Training

Two questions were put forward to operatives, foremen and supervisors on site with respect to training. One was whether they had been sent for training since they joined the company and what kind of training programme the company have for staff. Only one company in Kaduna Site 12 did the supervisor claimed to have been sent for conference once. Secondly, whether prior to commencement of project and intervally as the project progresses the operatives had training on how good quality concrete should look like. Their ratio or proportion for measurement during mixing. The answers received from all site were that they learn as the job progresses.

3.3 Data From Questionnaire

Table 3.2 Qualification of Site Representatives.

Site Agent/Supervisor Qualification	Number
M.Sc	-
B.Sc	2
HND	8
OND	3
Advanced City and Guilds/Draughtsman	2

Table 3.3 Whether Company Have A Concrete/Masonry Foremen.

Response	Respondents	% Response
Yes	13	86.67
No	2	13.33

Table 3.4 Whether Materials Received On Site Contains Impurities

Material	Response	Respondent	% Response
Cement	Rounded balls	9	60
	Powdered form	6	40
Aggregate	Yes	8	53.33
	No	7	46.67

Table 3.5 Improving Quality Of Materials Received

Material	Response	Respondent	% Response
Cement	Reject	9	60.00
	Use	5	33.33
	Not applicable	1	6.67
Aggregate	Sieve	10	66.66
	Wash	-	-
	Reject	1	6.67
	Use	3	20.00
	Not applicable	1	6.67

Table 3.6 Physical Appearance Of Concrete

Parameter	Strongly Disagree 1	Dis-agree 2	Neither Agree nor Disagree 3	Agree 4	Strongly Agree 5	Total Weight
a. Grey Colour Mix, glistening and Medium workability			3	3	4	34
b. Coarse and grey colour mix			1		2	13
c. Low workability, light grey colour mix.					3	15
d. Low workability, sandy colour			1			3
TOTAL						65

Table 3.7 Mode of Aggregates Storage

Response	Respondents	% Response
Directly on Bare Ground	14	93.33
On lean Concrete Platform	1	6.67
On Tarpaulin	-	-

Table 3.8 Type of Package to Cement.

Response	No. of Respondents	% Response
Paper bag	9	60
Polythene Sack	6	40

Table 3.9 Storage Of Cement

Parameter	Respondents	% Response
a. In open air with raised timber floor and tarpaulin		
b. In Shelter with raised timber floor and concrete slab	3	20.00
c. On bare ground in Shelter	8	53.33
d. On lean Concrete in Shelter	4	26.67

Table 3.10 Average Number of torn Cement Bags

No. of Torn Bags Class	No. of Respondents	% Response
0 - 5	2	13.33
6 - 10	2	13.33
11 - 15	3	20.00
16 - 20	6	40.00

Table 3.11 Maintenance Of Quality Of Torn Cement Bags.

Response	No. of Respondents	% Response
- Use Immediately	12	80.00
- Cover completely to prevent Moisture Penetration	1	6.67
- Reject	-	-
- Other specify	2	13.33

Table 3.12 Number Of Cement Placed One On Another During Storage

Response	No. of Respondents	% Response
< 15	1	6.67
15	10	66.67
> 15	1	6.67
Not Applicable	3	20.00

Table 3.13 Order Of Usage Of Cement In Storage

Response	No. of Respondents	% Response
Last-in-First-Out	4	26.67
First-In-First-Out	11	73.33

Table 3.14 Usage Of Silos

Response	No. of Respondents	% Response
Yes	3	20
No	12	80

Table 3.15 Whether Or Not Company Send Staff For Training.

Response	No. of Respondents	% Response
Yes	7	46.67
No	8	53.33

Table 3.16 Types Of Training Company Send Staff For And Those Who Do Not.

Response	No. of Respondents	% Response
Formal or Vestibule	1	6.67
Informal or Course	6	40.00
Non	8	53.33

Table 3.17 Whether There Is On The Site Training On Concrete For Workers.

Response	No. of Respondents	% Response
Yes	6	40
No	9	60

Table 3.18 Method Of Transportation Of Concrete On Site.

Parameter	Ranking 1	2	3	4	5	6	7	Total Weight	% Response
a. Headpan and wheel Barrow					2	2	2	36	38.71
b. Dumper						2		12	12.90
c. Crane							4	28	30.11
d. Pumping Machine						1		6	6.45
e. Belt Conveyor									
f. Fork Lift						1		6	6.45
g. Other Specify					1			5	5.38
	Total							93	100

Table 3.19 Issue Of Providing Covering To Sand And Gravel While Being Transported To Site.

Response	No. of Respondents	% Response
Yes	3	20.00
No	12	80.00

Table 3.20 Kind Of Road Concrete Is Transported.

Response	No. of Respondents	% Response
Unbarred Rough Road	10	66.66
Smooth Road	4	26.67
Tarred Road	1	6.67

Table 3.21 Whether Column Of Normal Height (2.1-3m) Are Casted Once Or Twice.

Response	No. of Respondents	% Response
At once	12	80.00
In Two Stages	3	20.00

Table 3.22 Whether Or Not Heap Of Concrete Are Made While Casting Slab.

Response	No. of Respondents	% Response
No	10	66.67
Yes	5	33.33

Table 3.23 Observation Of Bleeding After Casting Concrete. (Normal Slab).

Response	No. of Respondents	% Response
No	11	73.33
Yes	4	26.67

Table 3.24 Whether Company Do Retemper Concrete While Casting.

Response	No. of Respondents	% Response
Yes	10	66.67
No	5	33.33

Table 3.25 Observation Of Honey Combing After Striking Off Formwork To Columns And Slab

Response	No. of Respondents	% Response
No	1	6.67
Yes	14	93.33

Table 3.26 Mostly used Equipment for compaction.

Parameter	Not Used	Often Used	Fairly Used	Freq. Used	Total Weight
Handwood Rammer				7	28
Pocker Vibrator				5	20
Surface Vibrator				2	8
External Vibrator				1	4
				Total	60

3.4 Sampling Of Site Concrete

The motive for carrying out an experiment is to show the quality of materials used on site. The crushing strength test is a test that reveals the fitness of materials used to produce the concrete on site. For this reason, portions of concrete produced was collected and cast in moulds, to make cubes. This was done since all sites visited refused to give the result of their cubes crushed on site. Although, the research does not intend to carry out tests on all sites, since this is purely a management research work, only cases found with an extreme abuse of handling was picked to buttress finding on site.

3.4.1 Testing

There are Standard procedures for carrying out concrete cube test. According to B.S.12, the procedure is as follows:-
Moulds of (150mm × 150mm × 150mm) wooden box were used. From the sites concrete produced, fresh concrete were taken and then poured into box in three layers, compacted by a tamping rod of 25mm diameter with 25 blows for each layer. The concrete mix ratio of site concrete produced was observed to be 1:2:4 in all cases, with water-cement (w-c) ratio of 0.5 used for the mixing.

The cubes were removed from mould the following day and completely submerged in water tank on site and removed for crushing in seven (7), fourteen (14) and twenty-eight (28) days respectively.

The average comprehensive strength result for cubes in two different sites marked A and B are given in table 3.27 on the next page:

Table 3.27 Average Comprehensive Strength Of Site Concrete

Produced at 7, 14, And 28 days And Standard Specified

	SITE					
	A			B		
Age (Days of Concrete Cube	7	14	28	7	14	28
Strength (W/mm^2)	9.30	12.06	13.92	9.49	11.57	13.96
Standard Strength According to BS12 N/mm^2	14	17	21	14	17	21
Date Cast	3/2/95	3/2/95	3/3 /95	4/2/95	4/2/94	4/2/95
Date Crushed	10/2/95	17/2/95	3/3/95	11/2/95	18/2/95	4/3/95

Source: Author's Analysis.

Appendix 3 - Shows the result of ten cubes each for the three set of crushing in the two site. Note that each set of crushing is of ten cubes. Graph 2 below shows what is obtained from site compare with the standard.

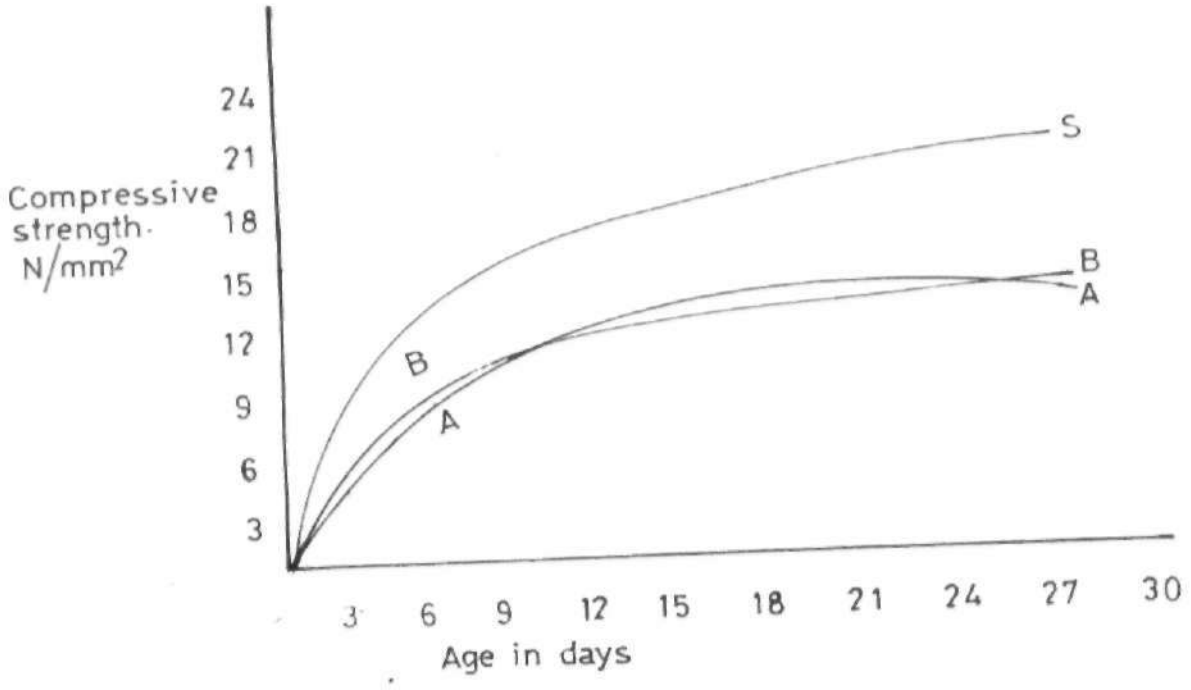

KEY

A—Site A cube strength curve

B—Site B cube strength curve

S—Standard and strength curve from British code of practice

FIG. 3·1 COMPRESSIVE STRENGTH CURVE FOR SITE CONCRETE CUBES COMPARED WITH THE STANDARD

SOURCE:- AUTHOR (1996)

Chapter 4

4.0 DISCUSSION

4.1 Preamble

Every step in the process of concrete production is very important. Whatever is done at this stage of the building process remains with the building throughout its lifespan. It is noteworthy that majority of modern buildings have an average of 50% concrete content, which is directly associated with the structure of the building

It is imperative therefore that concrete production must be done to the highest degree of quality feasible, to avoid the dire consequences usually associated with its failure.

This in effect implies adhering to established procedures of good practice.

In this chapter a comparative analysis of good practice on site as against recommended good practice is presented along with discussions of observations made on the sites.

4.1.2 Properties of Materials on Site

Good concrete practice requires that cement for concrete practice must be in powder form with a fineness of 2500 cm^2/g. This is only achievable if the cement is properly stored and kept away from humidity.

Cement: Cement used on most sites were in powdered form with the exception of sites 5, 13 and 9 where aggregated cement were used in the making of concrete. This is likely to be reason for low strength concrete production on these sites. Cement according to Atuanya (1974, P. 8), for construction shall be 2500cm^2/g in fineness.

Aggregates: Hand-crushed coarse aggregate that has been decomposed (that is not hard or are soft) having the following impurities charcoal and lots of crumbled parts as a result of abrasion process were seen on most sites. This has a great effect on the strength of concrete produced, which is likely to be low. The only sites with exception are 1, 2 and 7 where machine-crushed coarse aggregates were seen to be used in the making of concrete and are angular in shape in effect having good bonding capacity. PCA (1980, P.101) states that coarse aggregates should be "hard and not the decomposed type of rock or aggregate".

Fine Aggregates: On sites 4, 6, 7, 5 and 3, charcoal was seen in large quantities in consignment of fine aggregates, a lot of silt was also observed in them. On sites 13, 10, 8, 9, 12, 14 and 11 soft
sand was used in the making of concrete. These are detrimental to the concrete produced resulting in low strength. Murdock (1979, P.124) states that "fine aggregate should be sharp sand, free of

mud, silt, clay and charcoal and also not the soft type". On sites 15, 1 and 2, they were seen to adhere to good practice with respect to the physical qualities of fine aggregates being used.

Water: The water being used on most sites are coloured. This is an indication of the quality of water on various sites, that it contains silt, clay and algae. The colours indicating these impurities are either brown or green. This has a lowering effect on the strength of concrete being produced. The sites where potable water was in use are 1 and 2. According to the standard practice that has been identified, Murdock (1979, P.137) states that "water should be free from algae, odour, silt, organic acid, alkalis, salts and colourless".

4.2 STORAGE OF MATERIALS ON SITE

4.2.1 Cement Storage on Site

Cement on sites 6, 14, 8 and 9 were seen placed directly on bare ground. There are heaps of cement on bare ground which are exposed, seen on these sites. This practice is detrimental to the achievement of required strength of concrete and far from the standard practice on concrete.

Noted particularly on all the sites in Zaria which are sites 3, 4 and 5, in Kaduna sites 11, 12 and 13, in Kano sites 7 and 10 taking from cement that has been heaped and exposed to make concrete. This exposed cement might have absorbed moisture thereby reducing its strength and therefore reducing the strength of the

concrete produced.

Cement were stored away from site by the following companies 5, 1 and 2. This is on a raised timber floor which is in line with what is spelt out as the standard practice. A lot of the above might be reasons for low strength concrete production on site.

4.2.2 Storage Of Aggregate On Site

Coarse aggregate were seen store on the ground in all the sites visited. It was observed that during break time, the labourers sit on them to chew sugar cane and groundnut thereby leaving its chaff and shells on them, scattered on the consignment. There was high occurrence of this act on site 4,5 and 11. these items leads to a low strength concrete production. The standard practice is that, sites should be kept clean and storage areas should be identify as "NO GO" areas, except during concrete production. Three sites, namely 1,2 and 15 store their aggregate away from the site and this occurrence is avoided. Hence, no impurities found in the concrete produced. According to the standard practice, aggregate must be free from all these impurities in order to obtain good result.

Fine aggregate- the same phenomenon above is observed as in coarse aggregate at storage. On site 3,4 and 5 there was greatly the occurrence of this situation. Due to this reason, test was perform to ascertain the strength of concrete. But it is obvious that it will lead to low strength concrete production.

4.2.3 Water In Storage

Three cases are going to be discussed here:

a) Water was stored in underground concrete and steel tanks, algae were seen growing in them. Labourers at the close of the day's work, take their bath in this tanks, thereby introducing organic content and eventually this water produce bad odour. This is detrimental to the concrete produced.

b) Sites 3, 4, 5, 13 and 9 were seen using water obtained from streams and rivers to make concrete. This water contains silt and other impurities that have harmful effect on the concrete produced.

c) The last case is the case of sites 1, and 15 that use potable water for the making of concrete. This sites work in adherence to the specification of the standard practice.

4.3 Production Of Concrete On Site

This sub-heading shall be discussed in the following headings.

i. Equipments used in measurement

ii. Method of mixing

iii. Measurement of materials for mixing

iv. Mixing time

v. Platform provision

i. All the sites use the following equipment for the measurement of materials for concrete. Hand shovel, headpan, wheel barrow and bucket.

ii. Two methods of mixing were used for the mixing of materials

on site. The mechanical and manual mixing method.

The standard practice establishes that the mechanical method is the best method of mixing. This is due to the uniformity of mixture that will be obtained. Most of the sites use the manual method for mixing. This implies that the result of the mixing will be poor. Mainly because the particles of the material will not be uniformly coated with the cement paste. The sites that use concrete mixers for mixing are sites 1 and 2.

iii. The use of both wheel barrows and headpans for measurement of materials for mixing was observed in the production of a batch of concrete in all the sites. This is contrary to the standard practice in which one equipment should be used. This may lead to wrong counting in both cases of the equipment being used and hence incorrect measurement. Incorrect aggregate-cement ratio may result, leading to the production of harsh mix or concrete with a little of coarse aggregate. In these two cases weak concrete is produced. This could be attributed to be the reason for low strength concrete.

iv. On the two sites that concrete mixers were used for production of concrete, the mixing time per capacity of mixers were not adhered to. It was observed that they mix beyond the specified time for mixing. This results in the grinding of the coarse aggregate and leading to e fine aggregate in the concrete. This may be also one of the reasons for low strength concrete production. PCA (1980,

P.281) gives the sizes of aggregates after five minutes of mixing. Murdock (1979, P.143) gives the time for mixing of materials per capacity of mixers. See section 2.3.2.

v. It was observed that earth was usually packed with wet concrete from mixing point to point of placement due to the non-provision of a platform (lean concrete base) at the mixing point. This act is detrimental to the concrete produced. Holes are created in concretes as the earth dry up and in cases where they are mixed together a weak zone of concrete is produced.

From the above, the practice observed on site was contrary to the standard practice identified for good concreting and are reasons for low concrete strength.

4.4 Placement Of Concrete On Site

It was observed that all sites with the exception of sites 1 and 2 were using headpan and wheel barrow for the placement of concrete. The problem that occurs with the use of these equipments is segregation of wet concrete, leading to bleeding. As the concrete is being transported on mostly rough pathways on site jolting of the concrete results and the above phenomenon (bleeding) takes place. The coarse aggregates move down while the fine aggregates stay at the middle and water is retained at the surface. They are being poured like this at point of placement without mixing. This leads to the occurrence of honeycombing and hence low concrete strength. The standard practice says that the best method

of transportation of concrete, without it being disturbed is through the use of cranes, concrete pumping machines and so forth. The sites that act in compliance to this are sites 1 and 2.

4.5 QUALITY OF CONCRETE ON SITE

The results from cube tests at 7, 14 and 28 days shows that the materials used for making concrete is poor. At 7 days, the expected strength for good strength is 14N/mm^2 from BS 12. For 14 days 17N/mm^2 and 21N/mm^2 for 28 days. The average strength obtained from sites is shown in the table on the table below.

Table 4.1 Average Compressive Strength of Site Concrete

	SITE					
	A			B		
Age (Days of Concrete Cube	7	14	28	7	14	28
Strength (W/mm^2)	9.30	12.06	13.92	9.49	11.57	13.96
Standard Strength According to BS12 N/mm^2	14	17	21	14	17	21
Date Cast	3/2/95	3/2/95	3/3/95	4/2/95	4/2/94	4/2/95
Date Crushed	10/2/95	17/2/95	3/3/95	11/2/95	18/2/95	4/3/95

Source: Author's Analysis.

The stregth of site concrete is generally low and the reason for this is the lack of appreciation for high quality concrete. All the measures that are supposed to be observed are not adhered to.

4.6 TRAINING OF STAFF ON SITE

Training has been accepted to be that which improves the

standard of productivity. Both in quality and quantity of production, it was observed that majority of firms do not send their staff for training. These does not allow staff to be abreast with developments in the field or learn better ways of handling jobs. When staff are trained they become more quality conscious and also improve their skill on job execution leading to increased productivity. Lack of training is one of the reasons for low concrete strength on sites.

4.7 Supervision

It was found that on all the sites investigated adequate attention was not paid to supervision of concrete production. This resulted in incorrect measurement of materials which may lead to poor quality of concrete production. As a result of the above the coarse aggregate will be more than the required in the mix ratio, the quantity of sand might be that which is more in proportion than the specified, the water added could also be more or insufficient and may be the combination of two of the above phenomenon or three that is affecting the quality of concrete negatively. In all the cases it reveals that cement is inadequate thereby resulting in low concrete strength. This situation can be corrected by giving enough supervision to the production of concrete.

4.8 ANALYSIS OF DATA OF DATA FROM QUESTIONNAIRE

From table 3.2, it reveals that personnel that are quality conscious such as supervisors and site agents are responsible for taking care of site. Those who hold the Higher

National Diploma certificates and degrees total 66.67% while those holding the Ordinary National Diploma down wards total 33.33% was recorded. What is supposed to be the ideal situation is that every site should have a qualified and quality conscious person responsible to it. With respect to this, the above situation is acceptable.

Table 3.3, indicates that 86.67% of the firms investigated have concrete and masonry foreman on site. This seems to follow the tradition in organisational chart of a construction company, but the question is, do they carry out their responsibilities fully? Two of the sites investigated representing 13.33% have no foremen so the site agents carry out their duties.

Table 3.4 reveals that 60% of the firms investigated indicate seeing particles of cement in rounded balls. This means the cement had caked contrary to the powdery form specified for good quality cement. About 53.33% of the firms indicate that they see impurities in consignment of aggregates received on site (fine and coarse). In the literature , the quality expected of fine and coarse aggregate indicate that they should be free from impurities.

Table 3.5 shows that a significant percentage (60%) of the sites visited do reject cement found in rounded balls. While for aggregates, 66.66% sieve impurities in consignment, 20% use them in the state they are brought, 6.67% reject them.

The T-test and Chi-square were used to analyze data from table 3.6

Statement of Hypothesis

The Null Hypothesis, H_0, states that most companies use grey colour, glistening and medium workability to mean good quality concrete mix.

i.e $H_0 : U_0 < U_1$. where

U_0 = Calculated mean value of data to value

U_1 = table value of tn-1 Sample mean

The alternative hypothesis H_1 States that most companies do not use grey colour, glistening and medium workability to mean good quality concrete mix. i.e. $H_1\ U_0 > U_1$

Decision Rules

For the null hypothesis to be accepted, then the calculated value of t must be less than the table value of t_{n-1}

i.e, $t_0 < t_{n-1}$ otherwise, the hypothesis is rejected and the alternative hypothesis is accepted.

Result

For the test of proportion (t-test), the formulae used is stated as test conducted at degree of freedom (tn-1) and at 5% level of significance.

Where X is the % mean (average) score of the sample, U_0 is the % of the parameter considered. P is probability of the parameter, q = 1 - p, n = sample size.

Total score = 65

No. of parameter = 4

$$Mean\ score - \frac{65}{4} - 16.25$$

$$\%\ of\ parameter\ considered = \frac{Frequency\ of\ parameter}{total\ score} = \frac{34}{65} = 0.523$$

q = 1 - p = 1 - 0.52 = 0.48,
Where X = 0.25, p = 0.52, u = 0.52, q = 0.48

$$t_o = \frac{x-u}{\sqrt{\frac{pq}{n}}}$$

$$t_o = \frac{0.25-0.52}{\sqrt{\frac{0.52x0.48}{15}}} = \frac{0.27}{0.13} = 2.08$$

$t_0 = 2.08 < t_{n-1} = 2.14$

Accept the hypothesis that most companies use grey gliste and medium workability to mean good quality concrete mix on site by its physical appearance.

The second test on the question is to ascertain if all the parameters are equally significant and equally affected, a chi-square test is applied.

Parameter	a	b	c	
Frequency Observed	34	13	15	3
Expected	16.25	16.25		16.25

$$\text{Chi-square} = \frac{(\text{Frequency observed}-\text{Frequency Expected})^2}{\text{Frequency Expected}}$$

$$= \frac{(34-16.25^2}{16.25} + \frac{(13-16.25^2}{16.25} + \frac{(15-16.25^2}{16.25} + \frac{(3-1\cdot\ \ ^2}{16.25}$$

$$= 19.39 + 0.65 + 0.10 + 10.80$$

$$= 30.94$$

There are 4 parameters (k) d.f = k-1= 3

at 5% level of significance X = 7.815.

This result indicates that all the parameters are not equally affected.

From the literature the best way of assessing good quality concrete physically is that which is generally used on site, that is it being grey colour glistening and of medium workability.

Table 3.7 shows that a very significant percentage of 93.33% of companies investigated store aggregate directly on bare ground. But the literature established that aggregate should be stored on lean concrete with baffle walls to separate them into sizes and with a slight fall to drain off water from aggregate. Secondly, for elimination of earth while loading for mixing.

Table 3.8 show the type of packaging in which sites receive their cement. Although it is not mandatory to receive in a particular packaging, those in polythene sacks are of advantage over those in paper bags because they do not tear easily.

From table 3.9 there is the indication that 53.33% of the five, investigated store cement directly on bare ground in shelter. The literature establishes two prominent ways of cement storage, one, by silos, second by raised timber floor on concrete slab (See fig 2.1 in review of standard construction procedure chapter).

Table 3.10 shows a class interval of record of cement paper bags torn per week or per delivery of 600 bags.

No. of torn bags	Xm Load Point of Class	No. of Respon-dents	fXm	Xm-U	$(Xm-U)^2$	$(Xm-U)^2f$	% Respon-dents
0 - 5	2.5	2	5	10.9	117.72	235.25	13.33
6 - 10	8.5	2	17	4.85	23.52	47.04	13.33
11 - 15	13.5	3	40	0.15	0.02	0.06	20.00
16 - 20	18.5	6	111	5.15	26.53	240.00	40.00
Total			173.5			522.55	

Mean = $\frac{173.5}{13}$ = 13.35 213.

Standard deviation

$$S = \sqrt{\frac{522.55}{13}} = 6.34 \quad Variance\ S = \frac{S}{\sqrt{n}} = 1.8$$

For a 95% C.I using a student t-distribution

$$M = 13.35 \pm 2.14 \times 1.8 = 13.35 \pm 3.85.$$

The above computation shows an average tear of between 13 and 17 per week or per delivery of 600 bags. From fundamental facts in review of standard construction procedure chapter, average tears exceeding 20 are not acceptable. It is injurious to strength of concrete. From calculation, the number 13-17 falls below the limit, so tears received on site is fair having negligible effect on concrete.

Table 3.11 shows that 80% of companies investigated affirms immediate usage of cement that their packing materials were torn during delivery. This agrees with what the literature review also specify. It implies good practice.

From practice, the number of cement bags piled one on another during storage do not exceed 15. From table 3.12 of the sites investigated upon, 73.34% comply with this specification.

Table 3.13 indicates that 73.33% of companies investigated uses cement in storage in the order of first in first out in accordance with the right practice.

From table 3.14 80% of the firms investigated indicate not having used silos before for storage of cement.

Table 3.15 reveals that 53.33% of companies investigated do not send staff for training. This is contrary to the view that for an organisation's product quality to be high, staff need to be abreast with the recent development in the field which makes training essential.

Table 3.16 indicates that 6.67% of companies investigated sends staff for the vestibule kind of training. This is contrary o the convention that says training is necessary at all levels.

Table 3.17 shows that 60% of companies investigated do not have on the site training on concrete for operatives. The worker needs orientation or some kind of training in the duties and responsibilities to be performed. Where this is lacking, there will be poor production output.

The T-test was used to analyze data from table 3.18.

Statement of hypothesis

The "Null hypothesis" H_0 States that the vertical and horizontal transportation of concrete on most sites is done by headpan and wheel barrow i.e $H_0: U_0 > U_1$

The alternative hypothesis H_1 states that the vertical and horizontal transportation of concrete on most sites is not done by head-pan and wheel barrow.

Decisions rules

For the null hypothesis t[illegible]e of t must be less than the table value of t_{n-1}

i.e $t_0 < t_{n-1}$ otherwise the hypothesis is [illegible] alternative hypothes[illegible] accepted.

Result

T-test at 5% level of signif[illegible]t.

Total score = 93

No. of parameter = 7

$$Mean = \frac{93}{7} = 13.29$$

$$\%\, Mean\ Score = \frac{Mean}{Total} Score = \frac{13.29}{93} = 0.143$$

$$\%\, Percentage\ of\ parameter\ Considered = \frac{36}{93} = 0.397$$

Where x = 0.143, u = 0.397, p = 0.397, q = 1-p = 1-0.397=0.603

$$t_o = \frac{x-u}{\sqrt{\frac{pq}{n}}} < m-1$$

$$t_o = \frac{0.143 - 0.397}{\sqrt{\frac{0.397 \times 0.603}{15}}} = \frac{0.254}{0.126} = 2.016$$

$$t_0 = 2.016 < t_{n-1} = 2.14$$

Therefore accept the hypothesis that states the vertical and horizontal transportation of concrete on most sites is done by head-pan and wheel barrow. Thus lowering the quality of concrete placed through segregation.

Table 3.19 reveals that 80% of materials being transported (specifically sand and gravel) are not being covered. It tells that they are liable to contamination from flying objects (debris). Thestandard establishes that these materials be covered properly while being transported.

Table 3.20 indicates that 66.66% of concrete on sites investigated are transported on unbarred pathways and the literature said when concrete is not transported on smooth routes it causes jolting and resulting into segregation.

Table 3.21 shows that 80% of columns casted are done once i.e. columns by height (2.1-3m) even though the literature specify that columns of this height should be casted twice.

From 3.22 it can be observed that 66.67% of casting made of slab on sites investigated do not allow conical heap to be made of concrete before spreading during casting. To reaffirm this the literature discourages conical heap of concrete.

Table 3.23 indicates that 73.33% of companies investigated observes bleeding after casting slab. This is a bad phenomenon as

established in the literature.

Table 3.24 records 66.67% of companies investigated c concrete. The literature spell it as a bad practice.

Table 3.25 shows that 93 of the companies investi observes honey combing after striking off formwork to columns and slab. Also from the literature this is a measure of the strength of concrete and it implies bad concreting.

The t-test and chi-square were used to analyze data on Table 3.26.

Statement of Hypothesis

The "Null hypothesis" states that majority of construction companies use hardwood rammer to compact concrete during placement.

i.e H_0:U.< U.

The alternative hypothesis states that majority of construction company do not use hardwood rammer to compact concrete during placement.

i.e. H < u, > U.

Decision Rules

For the Null hypothesis to be accepted, then the calculated value of t_0 must be less than the table value of t_{n-1} i.e. $t_0 < t_{n-1}$. Otherwise the hypothesis is rejected the alternative hypothesis accepted.

Result

T-test at 5% level of significance, one tail test

Total score = 60, No. of parameters= 4

where x = 0.250, u = 0.467, p = 0.467, q = 1-p = 0.533

$$Mean - \frac{60}{4} - 15$$

$$\%\,Mean\ Score - \frac{15}{60} - 0.25$$

$$\%\ of\ parameter\ considered - \frac{28}{60} - 0.467$$

$$t = \frac{x-u}{\sqrt{\frac{pq}{n}}} = tn-1$$

$$t_o = \frac{0.250-0.467}{\sqrt{\frac{0.533x0.46}{15}}} = \frac{0.217}{0.129} = 1.682$$

$t_0 = 1.682 > t_{n-1} = 2.14$

Accept the hypothesis that majority of construction company use handwood rammer to compact concrete during placement. This indicates that it will not be compacted well, reducing the strength of concrete placed and leading to weak zones of concrete liable to collapse when loads are on it. A further test was carried out to ascertain if all the parameter in the question are equally affected or significant.

Parameter	a	b	c	d
Frequency Observed	28	20	8	4
Expected	16.25	16.25	16.25	16.25

$$X^2 = \frac{(O_f - E_f^{'})}{E_f} = \frac{(28 - 15^2)}{15} + \frac{(20 - 15^2)}{15} + \frac{(8 - 15^2)}{15} + \frac{(4 - 15^2)}{15}$$

$$= 11.27+1.67+3.27+8.10$$
$$= 24.31$$

$$X^2 = 24.31 > X^2 = 7.815.$$

This shows that all the parameters are not equally affected or significant. Hence compaction of concrete on site is mostly done by hardwood rammer compared to developed world where mechanical means are used.

Table 4.2 STEPS FOR GOOD QUALITY CONCRETE

Conditions	Cement	Aggregates	Water
Storage	Stored on raised timber floor, laid with tarpaulin in air tight shelter, free from caking ie not in lumps and not exposed	Stored on rolled ground laid with concrete or tarpaulin, with a slight fall for water drainage, free from impurities such as :- chemicals, mud, groundnut shell, sugar cane chaff, decomposed rock, grasses and decomposed trees.	Stored in clean underground or surface tank, colourless, free from algae or microscopic organisms and odourless
During Usage	Cement that its packing material are torn should be used immediately	Fine aggregate should not dust the hand when in use, sieved to remove impurities, shovels can be used for packing when stored on tarpaulin, there is the eradication of taking along mud or spoil.	Direct from tap, transported through hoist and buckets, tanks used for storage to be cleaned every week.

Transportation	To avoid segregation in concrete during transportation, the following transportation modes suit best. crane, pumping machine and fork-lift. This avoids jolting of concrete during transportation. Do not retemper concrete,if compulsory to be done, it shall be with cement grout [cement and water] in appropriate proportion.
Placing	Columns of normal height (2.1m-3m) should be casted twice. Concrete should be vibrated/compacted well after placing.Avoid heap of concrete during placing, they should be spread immediately after pouring.
Training	Foremen to watch production of concrete for every batch. Prior to commencement of worker, workers should be instructed on how to obtain good quality concrete. On the job training to be given to operative.

Source: (1) Nigerian Industrial Standard II (1974, p. 89).
(2) PCA (1980, p. 93, 101).
(3) Murdock (1979, p. 124).

4.9 CONSEQUENCES OF MAL-HANDLING MATERIALS FOR CONCRETE AND WET CONCRETE.

4.9.1 LEADS TO SOURCES OF WEAK ZONES

When the loose material for making concrete is of poor quality, for example the use of caked cement, coarse aggregate that do not have enough strength and soft sand in concreting, these sort of materials, after using them for mixing to produce concrete, it's product can not meet the required specified strength. This may lead to zone of weak strength and may cause collapse of part or entire building, leading to loss of live or serious injury. Also, if concrete is mal-handled, causing segregation and resulting to honeycombing. It may cause zones of low strength and may lead to collapse.

4.10.2 Time Loss And Delays

When collapse are experienced, time is being lost and the date for completion of project are not realised. This is due to the time that will be required in reconstruction of the collapsed part. The same period used in constructing the collapse part might be used in the reconstruction. this is termed delay in construction.

4.10.3Material Loss And Increase In Project Cost

Resulting from the collapse, material are wasted, as the collapse materials can not be reused. This leads to additional cost for replacing the collapse part. Hence, this pushes up the project cost.

4.10.4 Social Problem

When collapse occur in building and are rectified, what it register in the mind of people is, is it structurally safe, will it not collapse again, people are afraid to utilise the structure as a result of the occurrence. Hence causing a social problem.

Chapter 5

5.0 SUMMARY, CONCLUSION AND RECOMMENDATIONS

5.1 Summary

The development in Nigeria construction industry today is that which is turning from low rise structures of the colonial days to complex high rise building structures. Since concrete as an important element, the process of its production and subsequent handling is of great importance and interest. A fault at any stage of it's handling has great consequences.

In this work, efforts were made to design necessary and relevant procedures which will aid in receiving information on the various sites of practices on constituent material for concrete and production of concrete. Emphasis was given to methodology since it was core to obtaining good results when followed. An experiment was performed on two sites to show the state of the quality of materials been used on sites. The subjective descriptive method was used to analyze the data obtained from the field. The t-test carried out on questions is to show clearly the more occurring phenomenon on sites. The T-test applied accepted the parameters tested and discussions of data were made. It was equally found that strenght of sites concrete cube result is low. Its percentage is between 22.41% and 33.71% when compared with the standard.

5.2 Conclusion

Within this study, the author found a ground for the following

observation and conclusion.

a. The strength of the concrete used on these sites were low when compared to the standard. This may be due to the attitude of site operatives towards realising high quality concrete. It was observed that the practice of batching was done not in compliance to the standard. Headpans and wheel barrows are used at the same time to measure out materials (sand and gravel) in a single batch, thereby resulting in incorrect measurement of materials. In majority of the sites it was observed that mixing concrete were done manually. This may be one of the reason for the production of low strength concrete on these sites, since thorough mixing is not usually achieved.

(b) Although sites have qualified and experience site agents or supervisors, supervision of work by supervisors or site agents is observed to be low. Companies claim to have training programme for staff but it was found to be false. Only one company had ever send staff on a conference. No other training has been offered to staff apart from this identified. Training is likely to improve the production standard and thereby the quality of concrete produced.

(c) The equipment (headpan) used for the transportation of concrete for high rise structure leads to segregation of concrete through jolting.

(d) The storage system for cement is poor and gives rise to the caking of cement. This is through cement being placed directly on the ground. The storage of aggregates directly on bare ground, makes it prone to contamination by earth during

loading, as this is often packed along and onward for mixing and production of concrete. This may lead to low strength for concrete.

(e) The average strength of concrete cube obtained from site crushed were lower than the specified standard strength as shown in table 5.1.

Table 5.1 Average Strength For Site A And B Concrete Cubes

Age of Cube in Days	Site A in %	Site B in %
7	33.57	32.21
14	29.05	33.71
28	33.71	22.44

Source: Author's Analysis

From the table, cube of Site A were lower in strength compared to the standard for seven days by 33.57 percent while for Site B by 32.21 percent. For fourteen days, it was lower in strength compared to the standard by 29.05 percent and 33.71 percent for Sites A and B respectively.

Lastly, the site sample concrete strength for twenty eight days when compared to the standard were lower by 33.71 percent and 22.44 percent for Sites A and B respectively. This is likely due to earth, silt, sugar cane peels, groundnut shells and time loss during placing of concrete.

5.3 RECOMMENDATIONS

In order to improve the handling of concrete and concrete materials in the Nigerian construction industry, the following recommendations, which are based on the findings of the study are hereby made:-

(a) The strict adherence to the steps for good quality concrete as

shown in section 4.8, when this is followed, the following could be derived:-

(i) Allowance for careful planning of the site, the various storage sheds are tidied and in good order, hence ensuring accident free site (Note, not collapse).

(ii) The steps create a situation whereby more atention is placed on the various ways of handling materials for concrete and wet concrete on site, thus inculcating in the workers a greater sense of responsibility and maintenance of a high statndard of workmanship. This is achieved through training.

(iii) The issue of increase in project cost is eliminated since collapse will not be experienced of part or entire structure, due to the high quality of product.

These have a resultant effect, which are:-

- There will be no loss of lives.
- No wastage of material
- Delays of completion dates are eliminated since work are done once and correctly.

(b) Training provides grounds for high quality indiscipline. For this reason, to achieve good quality on site, it is recommended that training be given to the top level management (managers) and site agents (supervisors). Training is also recommended for the lower cadre workers (labourers), but the problem that could be experienced is the continual drift of this level of workers from zone firm to another. Due to the fact that they are looking for better paide job with their level attained. To avoid this, these

REFERENCES

1. Alele, S. (1993) Organisation Structure Of Medium-Size Construction Company In Nigeria. Unpublished M. Sc thesis, A.B.U., Zaria Nigeria.

2. Atuanya, U.O et al (1974) Specification For Ordinary Portland Cement. Nigerian Industrial Standard II. pp. 8.

3. Bayo O. (1994) Training For Quality In Construction Industry. Paper presented at N.I.O.B. Annual Conference, Bauchi. Pp. 14-18.

4. Besterfield H.D. (1990) Quality Control Practice. Hall, Englewood Cliffs, United States of America. pp. 235.

5. British Standard 4778 (1971). pp. 12.

6. British Standard 12 (1971). pp. 10.

7. Bloem, L.D. and Gaynor, D.R. (1963) Effects of Aggregate Properties On Strength Of Concrete. Journal of the american Concrete Institute, Proceedings: Title no. 60-62 October Pp. 1429.

8. Barry R. (1969) The Construction of Buildings Vol. 1. Fletcher and Sons Ltd. Norwich, Great Britain. pp. 63.

9. Frank H. (1981) Construction Plant Examination And Materials Handling Equipment And Methods. Granada Publishing Ltd. Great Britain. Pp. 194, 219, 184, 109-163.

10. Frank R.D. (1982) Materials Of Construction. 1st Edition. Reston Publishing Company Inc. Virginia. pp. 73,72.

11. Glueck, W.F. (1978) Personal: A Diagonostic Approach Rev. Edition, Dallas, Texas, Business Publications. pp. 349.

12. Gbadebo A. (1992) Building Regulations: A Law To Control Builders In Nigeria. Daily Times, January 29. Pp. 7, 26.

13. Johnston E.J. (1981) Site Control Of Materials: Handling, Storage And Protection. Butterworths London. Pp. 28, 73, 69.

14. Joseph J.W. (1974) Concrete Construction Handbook. Second Edition. McGraw-Hill Book Company, New York.

15. Joint Contract Tribunal For The Standard Form Of Building Contract (1980) clause 8. On Materials Goods And Workmanship To Conform To Description, Testing And Inspection Pp. 16

16. Kunle W.A. (1994) Training For Quality In The Construction Industry. Paper presented at N.I.O.B. Annual *Conference*, Bauchi. Pp. 12.

17. Maguire B.W. (1991) Construction Materials. 1st Edition. Reston Publishing Company Inc., Virginia. pp. 123.

18. Murdock L.J. and Brook K.M. (1979) Concrete Materials And Practice. Edward Arnold. pp. 107, 124, 137, 50, 144, 146, 156, 159, 126, 185, 187, 197.

19. Neville A.M. (1973) Properties Of Concrete. Sir Isaac Pitman and Sons Ltd. London 2nd Metric Edition. Pp. 108, 234, 566, 590, 160, 267, 218.

20. Obiegbu, M.E. (1994) The Implications Of Quality Management In Construction For Maintenance. Paper presented at Nigerian Institute Of Building (N.I.O.B) Annual Conference at Bauchi. Pp. 4, 10, 13.

21. Orchard D.F. (1973) Concrete Technology Vol. 1 & 2 Applied Science Publishing Ltd. London. Third Edition. Pp. 352,141-142

22. Owoyale, S.O. (1990) Real Safety Factors of Reinforced Concrete Columns: A Case Study of Selected Sites In Nigeria. Unpublished Ph.D thesis Ahmadu Bello University, Zaria. Pp. 156 - 165.

23. (PCA) Portland Cement Association (1975) Principles Of Quality Concrete. John Wiley And Sons Inc., New York. Pp. 101, 111, 277, 282, 173-175, 177.

24. Phil F. (1979) Reinforced Concrete Fundamentals 4th Edition John Wiley & Sons, New York. Pp. 8.

25. Patton, W.J. (1976) Construction Materials Prentice Hall, Inc, Engleewood Cliffs, New Jersey. Pp. 98.

26. Remi M. (1995) Professionals Decry Incidences Of Collapsed Buildings. Tell Magazine, June 19, Pp. TP1.

27. Stewart D.A. (1962) The Decision And Placing Of High Quality Concrete. Second Edition. E. & F.N. Spon Ltd. London. Pp. 4,45

28. Taylor W.H. (1977) Concrete Technology And Practice. Fourth Edition. Macarthur Press, Purramatta, Australia. Pp. 83.

29. Taylor B. (1975) Management Development And Training Handbook. McGraw-Hill Publishers, New York. Pp. 184.

30. Tunde L. (1992) The Responsibilities Of The Design Team In Ensuring Quality In Construction. A paper presented at NIOB Annual Conference, Bauchi. Pp. 10.

TELL PROPERTY

•URBAN PLANNING
•REAL ESTATE
•MORTGAGE FINANCE
•HOUSING
•ARCHITECTURE
•CONSTRUCTION
•HOME DECORATION
•ENVIRONMENT

By BOYE AJAYI

Professionals Decry Incidences of Collapsed Buildings

The fifth edition of the Exhibition of Building Materials and Construction Technology, "Archibuilt '95," organised and sponsored by the Nigerian Institute of Architects, NIA, has this year lived up to its billings. It has adequately created the much required forum for professionals within the Building and Construction Industry to exchange and deliberate on ideas and developments as it affects the sector. In furtherance of the efforts towards promoting co-operation among the building professions, different days of the exhibition were adequately designated Engineers', Architects', Town Planners', Quantity Surveyors', FIDAN'Es' and Estate Surveyors' days. During these differently classified professional days, ideas were exchanged and thoroughly debated upon, particularly as it relates to the various professional disciplines.

Speaking during the Engineers' day, the president of the Nigerian Institute of Architects, and chief host of the Archibuilt '95, Charles Maduoh, called on the government of the Federal Republic of Nigeria to enact without much delay, an enabling decree which will specify adequate punishment for anyone including the property owners, found to be involved in any collapsed building. The president vehemently recommended an additional punishment for anybody whose property collapses to include forfeiture of such land to the government. He, therefore, enjoined professionals within the industry to continuously educate their friends, relatives and associates about the benefit of using professionals, in all aspects of our human life.


Remi Makinde

The NIA president decried the prevalence of unlabled persons who account for up to 75 per cent of the activities of the industry and called for concise government intervention through: "Promulgation of relevant government status like the fire code and the building Codes; promulgation of a decree specifically setting out sanctions for all contractors and owners of collapsed buildings, and revision of government policies towards private sector participation in the development process." He called on all professionals to develop together with contractors and suppliers of building products, with mutual encouragement adding that "the limited funds available for the development by the industry can be conserved, recycled for managing implosion."

In his own address delivered on the occasion of PLANNERS' Day at the Archibuilt '95 Exhibition, Remi Makinde, president of the Nigerian Institute of Town Planners, NITP, observed that it is the responsibility of any government that her citizens live and work in a decent environment rather than in sub human conditions. He said: "In short, any responsible government will put in place facilities that will make delivery of decent housing for her citizens easy. She will also provide and maintain technical and social infrastructural facilities and services such as roads, water, electricity, functional drainage channels, schools, hospitals, clinics and so on, for her citizens at the right time, in the right places, in the right quantity and of the right quality." He emphasised that government should please fund research and help to provide avenues for disseminating research result to our industry and other entrepreneurs. Continuous importation of construction materials, he said, is anti-development and an counter-productive to our economy and technological development.

Makinde noted the fact that this year's Archibuilt appropriately dedicated each day to each of the various professions in the building industry and remarked: "Each of these professions has a principal role to play in the building industry and should continue to work as a team." He went on to say that, "the level of co-operation among them will help to eliminate the incidence of collapse of buildings." He pointed out that Town Planning Authorities have put in place the necessary regulations and specifications for architectural and engineering designers to use as guide, adding that "the builders should follow the specifications approved

APPENDIX 1

Pg 26 DAILY TIMES Wednesday, January 29, 1992

PROPERTY

Building Regulations:

A Law to control Builders in Nigeria

By
GBADEBO ADEMOROTI

WITHIN the past decade, incessant collapse of buildings in Nigeria have been the order and this has resulted in untold losses of lives and properties. It is, therefore, essential that an enduring solution should be found to stop or ameliorate such disasters in this country.

In the search for a permanent solution, the rate collapse of buildings in Lagos between 1980 and 1990 has been analysed. The analysis shows that 70 per cent of the buildings that collapsed in Lagos had not been approved drawings.

In another emphasis with building plans, it accounted for 20 per cent. Measured against the number of approved drawings, 13 per cent of such failures were due to usage of poor building materials. Another disturbing result is that 7 per cent of these buildings had approved plans but were built in flagrant disregard for them.

Confronted with these findings, what can the country do? Should stringent laws or strict punitive measures be instituted against the culprits? Can we conclude that if Nigeria has enough enforcement officers who have the requisite skills, builders will comply?

Another important revelation which is germane to the issue is the collapse of a school building belonging to Saint Gregory Comprehensive College, Port Harcourt, on June 6, 1990, the Council of Registered Builders of Nigeria (CORBON) visited the site and on the 16th of July, 1990, the Council submitted a memorandum to the Judicial Commission of Inquiry into the collapsed building. Its recommendations, among others, were:



• A. Gradebo Ademoroti

(a) That the Federal Ministry of Works and Housing as a matter of urgency, should set up a body to formulate the National Building Regulation for this country with input from all the professionals in the building industry and other interested bodies. Each Local Government can then review these building Regulations to suit its locality with the express permission of the Minister.

(b) That each Local Government should properly reorganise its Building Control Unit for effective enforcement of building regulations. Such unit should be headed by a registered builder or any other equally qualified professional who has such skills and zeal." 2

If these recommendations are accepted and implemented by the Federal Government, our problem in the area of building collapse in this country will be half solved. Because it is a scientific or rational research into a problem well put, is a problem half solved.

In that wise, the country will now be like other developed countries all over the world, although, this will really not be anything new in this country. It will be as putting new wine in an old keg, because this situation had ever existed in Lagos over five decades ago.

BUILDING BY LAW

The current building Regulations which give power to Local Authorities to control the construction of buildings and the modification of existing ones in accordance with the building laws, can trace their origin back 200 years to Great Britain.

At that time, the Romans conquered Britain and developed its pressure water supply, aqueducts and drainage facilities. Their marvellous feats of engineering gave them a high level of hygiene and health control. This was administered by Councils in the Urban area. Due to their concentration on water engineering, disease and illness were drastically reduced.

Unfortunately, when the Roman armies eventually withdrew, the British were not educated or sophisticated enough to maintain these advanced standards. The result was that the Roman influence gradually fell into decline and disuse.

After this period, there was no control on the type of building materials used in Britain. Combustible items such as timber and thatch were in close proximity, as it was then a popular roof covering, comprising dried straw and reeds.

Despite giving useful heat insulation to the occupants during the very cold winter periods, the thatch was often a harbouring ground for insects and highly prone to fire in dry summer period. During the Victorian Era, there were a number of Cholera epidemics causing thousands of deaths.

In 1665 the Great Fire of London occurred, lasting for several weeks and killing larger number of people. Also, during the Medieval ages, thousands of people died from numerous epidemics, the most well known being Bubonic Plague. These diseases were spread by rats which bred rapidly in the squalid urban conditions. The other main causes of disease were lack of pipe borne water and waterborne facilities together with primitive drainage and sewage disposal.

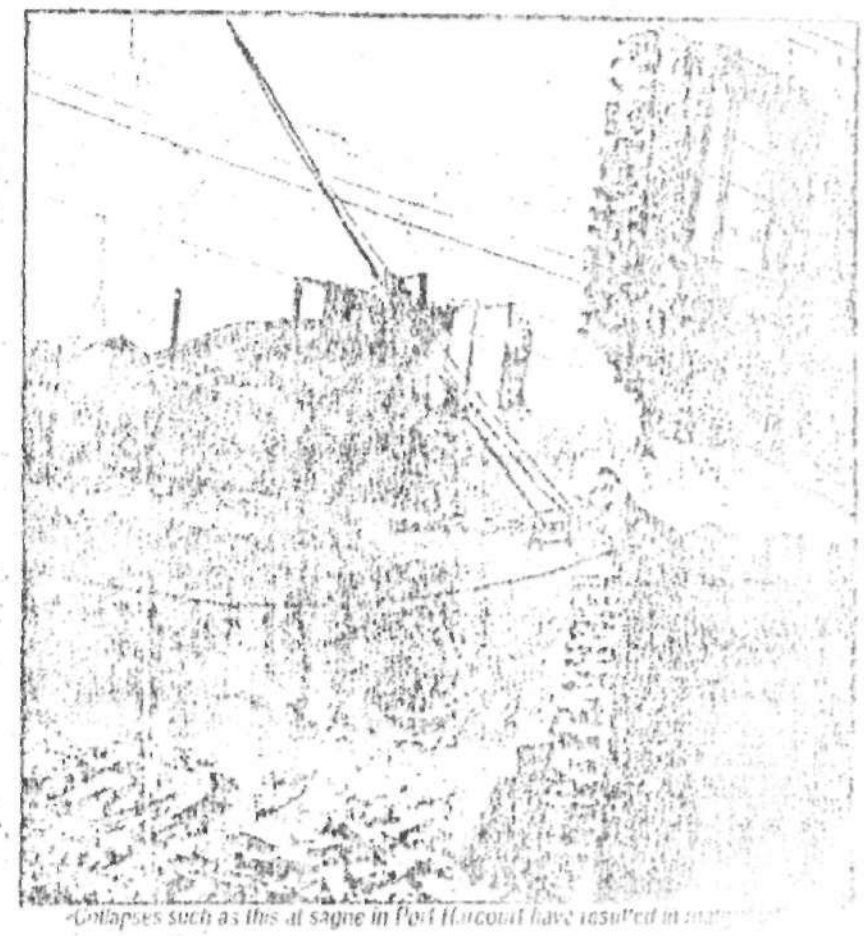

Collapses such as this at sagne in Port Harcourt have resulted in many

After these series of unpleasant and unsatisfactory events, it was decreed in London that new buildings should have adequate air-spaces to prevent the rapid spread of fire and should also have minimum window areas for light and ventilation. This decree first came in form of legislation known as 'Public Health Act 1875'. This gave birth to building bye-law which empowered the Local Authorities in general to control construction of buildings and related matters.

The Public Health Act 1936 extended these provisions and gave borough, urban and rural district councils power to make building bye-laws for their own districts subject to confirmation by the Ministry of Housing and Local Government. These bye-laws were based on a model form issued by the Ministry.

The building bye-laws were basically meant, among others, for the approval of working drawings prepared by the designer. The plan should comply in all its entirety with the bye-law as regards country, air-space, building line, materials, lighting, ventilation, staircase, sanitary conveniences, septic tanks, private sewers [illegible]. Secondly, the buildings or alterations should be carried out in accordance with the approved plan which is in force with the building bye-laws.

The building bye-laws normally applied not only to the erection of new buildings but also to alterations and extensions. Similarly, where there were materials change of use of building or part thereof, the bye-law normally required that notice of the change be given to the Local Authority.

BUILDING REGULATIONS

With effect from [illegible], the building bye-laws were replaced by the national "BUILDING [illegible]" which applied to the whole of England and Wales, except for the Greater London area as defined in the London Government Act, 1963. In London there is a special system of control [illegible] bye-laws and the London Building Act — 1939. The building [illegible] are reviewed from time to time [illegible] the current demand and [illegible]

Lagos 'll feel the impact of movement in three years

By
SONNY ATAMA
(PROPERTY CCORRESPONDENT

WITH less than one year of operation of 23 newly licensed mortgage institutions in the country, there is no doubt that property development will experience a boom in the nearest future the Managing Director of Horizon Mortgage Finance Ltd, Mr Olugbenga Onigbogi has said.

Mr Onigbogi who was speaking in an interview with Daily Times Property said that at the rate we are moving, we can realise the dream of the average Nigerian owning his own house by the year 2001 AD. If the average Nigerian cultivates the habit of saving towards owning his own house with mortgage finance houses and the building societies, homelessness will be reduced to the nearest minimum.

On the issue of property development as it affects Lagos now that it is no longer the federal capital, he said that the impact will be felt in the next three year when the Federal Government would have fully settled down at Abuja. For now speculators prefer to move to Abuja to reap the benefits of early property development, and this will in turn affect growth of property development in Lagos.

In a period of inflation Mr Onigbogi opined that property development always thrives well because the demand for property is always greater than the supply. The only way to beat it is by building of more housing units, which the mortgage institutions have geared up to support.



• Onigbenga Onigbi, managing Director Horizon mortgage finance

With high interest rate being charged now will low income earners benefit from the operations of the primary mortgage lending institutions? The Horizon boss said the National Housing Fund which they are expecting will provide a housing finance leverage for the not low privileged in the society as anybody earning about N3,000 and above will have access to funds, according to his ability.

He added that if people in the lower income group could form association to help one another in some processes of house building, the cost which is soaring high may be reduced because the existence of communal system of building houses in the olden days where many village people come together to help themselves. He [illegible] that N26,000 may be too low to build a house with but proper management, it can provide a house with simple construction.

Horizon mortgage finance may be much according to the boss, set an office in Abuja to boost housing delivery in the new federal capital.

The [illegible] mortgage [illegible] established by the [illegible]. This development [illegible] plans, regulations and [illegible] terms and [illegible] primary mortgage [illegible].

They [illegible] others, [illegible] building [illegible] savings [illegible] conduct [illegible] on proposed [illegible] facilities [illegible] adequate [illegible] mortgage [illegible] but [illegible] home [illegible] Mortgage [illegible] Mortgage [illegible] other [illegible] and [illegible] FMBN.

Appendix 3.

Particle shape classification from B.S 812: 1967.

Classification	Description	Examples
Rounded	Fully water-worn or completely shaped by attrition	River or seashore gravel desert, seashore and windblown sand.
Irregular	Naturally irregular, or partly shaped by attrition and having rounded edges	Other gravels, land or dug thin.
Flaky	Materials of which the thickness is small relative to the other two dimensions	Laminated rock.
Angular	Possessing well-defined edges, turned at the intersection of roughly planner faces.	Crushed work of all types crushed slag.
Flongated	Material usually angular, which the length is considerably larger than the other two dimension.	Crushed rock of all types crushed slag.
Flaky and Flongated	Material having the length considerably larger than the width, and the width considerably larger than the thickness	Crushed rock of all types crushed slag.

APPENDIX 4

RESULT OF STTF A AND B STRENGTH

DAYS	A_1	B_1
7	9.5	8.7
	9.8	8.8
	10.1	9.1
	8.9	9.3
	9.0	9.5
	9.2	9.7
	8.7	9.9
	8.9	10.2
	9.3	10.1
	9.6	9.6
14	12.1	11.3
	12.5	11.4
	12.6	11.7
	11.9	11.9
	11.8	11.8
	12.8	12.3
	11.5	12.7
	11.2	10.9
	12.2	10.8
	12.0	10.9
28	13.4	13.2
	14.5	13.6
	14.1	13.7
	14.2	13.9
	13.8	14.8
	13.6	14.6
	13.9	14.3
	14.1	14.1
	13.3	13.5
	14.3	13.2

RESEARCH QUESTIONNAIRE

RESEARCH TOPIC: The topic of the research is
A Survey of Concrete Practice on Selected
Construction Sites in Nigeria.

INTRODUCTION

This questionnaire is meant for collecting data on your firm's construction site. The exercise is purely an acàdemic one and the researcher promises that information received will be kept absolutely confidential. Accuracy and sincerity is highly emphasized on the information that will follow in this questionnaire as they will facilitate the success of the research.

Thank you for your anticipated cooperation.

INSTRUCTION: The questions require mostly filling in "Yes" or "No" and ticking. The person completing the questionnaire is expected also to write in the provided areas where sentences are to be constructed and numerical figures written. Enough space is provided beneath respective questions.

QUALITY

1. Town where project is located. ----------
2. Site agent/Supervisor's qualification. ----------
3. Does your firm have a concrete/ masonry foreman on this site? Yes ( ) No ( )
4. Do the materials you receive normally contain impurities such as:
   For cement, when opened, do you see the cement in rounded balls or powdered form?
   Rounded balls ( ) Powdered form ( )
   For sand and gravel, do you observe mud, clay, silt, organic impurities or charcoal in consignment?
   Yes ( ) No ( )

5) What do you normally do to improve their quality

- For cement
  - Reject ( )
  - Use ( )
  - Not Applicable ( )
- For Aggregates
  - Sieve ( )
  - Wash ( )
  - Reject ( )
  - Not applicable( )

6) Please indicate the one you adopt to mean good quality concrete on site using the usual method of checking according to the below ranking.

	Parameter	Ranking				
		Strongly 1	Disagree 2	Neither agree nor disagree 3	Agree 4	Strongly agree 5
A	Every colour mix glistening and medium workability					
B	Coarse and grey colour mix					
C	Low workability, light grey colour mix.					
D	Low workability sandy colour mix.					

STORAGE

1) Are aggregates on site stored:-
   a) Directly on the ground ( )
   b) On lean concrete platform ( )
   c) On tenpaulin, on the ground ( )
2) In what packaging is your cement received
   a) Paper bag ( )
   c) Polytene small sacks ( )
   d) Polytene big sacks ( )
3) What is the average record of torn cement paper bags recorded per delivery or per week during off loading.

4) What do you do to maintain the quality of cement in torn cement paper bags site.

a) Use immediately ( )
b) Cover completely to prevent moisture penetration ( )
c) Reject. ( )
d) Others specify._____.

5) What is the maximum number of cement you place one on another during storage. _____

6) Please indicate from below the kind of storage system you have for cement on site.

a) In open air with raised timber floor and tenpaulin ( )
b) In Shelter with raised timber floor and concrete slab. ( )
c) On bare ground in Shelter ( )
d) On lean concrete in Shelter ( )

7. In which order is your cement is storage used.

a) Last in first out ( )
b) First in first out ( ).

8) Have you used silos for storage of cement on any of your project.

Yes ( )
No ( )

TRAINING

1) Does your company usually send staff for training

Yes ( )
No ( )

2) What kind of training programme does your company have for workers.

a) Formal or Vestibule ( )
b) Informal or course ( )
c) Non ( )

3) Do you have any specific on the job training on concrete work for your workers on site.

Yes ( )
No ( )

5) Do you observe honey combing after striking off formwork to columns and slabs.

Yes ( )

No ( )

6) Indicate the extent usage of the one mostly used on your site.

Parameter	Not used at all 1	often used (rarely used) 2	Family used 3	Frequently used 4
Hand wood rainever				
Pocker vibrator				
Surface vibrator				
External vibrator				

TRANSPORTATION

1) Rank the mostly used method/equipment of transportation as shown below. Note that is starts with one (1) as the least weighted.

	Parameter	Ranking 1 2 3 4 5 6 7
a)	Headpan and wheel barrow	
b)	Dumper	
c)	Crave	
d)	Pumping machine	
e)	Belt Conveyor	
f)	Fork Lift	
g)	Other Specify	

2) Do your suppliers provide covering to sand and gravel during transportation to site.

Yes ( )

No ( )

3) What kind of is the transportation of concrete upon

a) Untarred rough ( )

b) Untered smooth ( )

c) Tarred ( )

SEGREGATION

1) Do you cost column of normal height (2.1m - 3.0m) in two stages or at once

at once ( )

in two stages ( )

2) Is concrete poured allowed to create conical heap before spreading when casting slab

No ( )

Yes ( )

3) Is bleeding observed after costing concrete

Yes ( )

No ( )

4) Do you normally retemper concrete while corcreting as a phenomenum of restoring workability of concrete.

Yes ( )

No ( )